WEMPE

CHRONOMETERWERKE
HAMBURG

Operating Instructions

WEMPE digital main clock 20097

Always read operation instructions prior to any settings carefully!

© Gerhard D. Wempe KG
Division Chronometerwerke

Steinstr. 23

20095 Hamburg - Germany

phone: +49 (0) 40 / 33 44 8 - 899
fax: +49 (0) 40 / 33 44 8 - 676

e-mail: chrono@wempe.de
internet: www.chronometerwerke-maritim.de

Kothes!-Dok-ID: 00305
07/2005

1 General Information 6
1.1 Information on the operating instructions 6
1.2 Explanation of the symbols 6
1.3 Liability and guarantee 7
1.4 Copyright protection 7
1.5 Transport 7
1.6 Packaging 8
1.7 Storage 8
1.8 Disposal 8
2 Safety 9
2.1 General information 9
2.2 Intended use 9
2.3 Operator's responsibility 10
2.4 Installation and operating staff 10
3 Technical Data 11
3.1 General Data 11
3.2 Electrical Data 11
4 Design and function 13
4.1 Design 13
4.1.1 Front view 13
4.1.2 System overview 14
4.2 Mode of operation 15
4.3 Accessories 15
4.3.1 Secondary clocks 15
4.3.2 Extension cards 15
4.3.3 Accumulator 15
4.3.4 Fuses 16
5 Installation and putting into operation 17
5.1 Safety 17
5.2 Requirements on the place of installation 17
5.3 Installation 18
5.3.1 Wall mounting 18
5.3.2 Console mounting 19
5.4 Fitting of cables 19
5.4.1 Fitting of cables at the wall-mounting version 19
5.4.2 Fitting of cables at the console-mounting version 20

5.5 Electrical connection 20
5.6 Connection of secondary clocks 21
5.7 Connection of GPS receiver 21
5.8 Putting into operation 22
6 Operation 23
6.1 Make basic settings 23
6.1.1 Unlock the keyboard 23
6.1.2 Select indicated time 23
6.1.3 Setting of time 23
6.1.4 Setting of date 24
6.1.5 Setting of automatic time adjustment 24
6.1.6 Switching on/off and adjusting of display illumination 24
6.1.7 Lock the keyboard 25
6.2 Additional settings 25
6.2.1 Remove write protection for additional settings 25
6.2.2 Setting of adjustment frequency for analogue secondary clocks 26
6.2.3 Setting of impulse width 26
6.2.4 Setting of analogue lines 26
6.2.5 Setting of secondary clocks impulse voltage 27
6.2.6 Setting of the internal standard interface 28
6.2.7 Programming of relay outputs for error messages 28
6.3 Set-up of secondary clocks 28
6.4 Use of extension cards 29
6.4.1 Extension card for digital clocks 29
6.4.2 MOBALine extension cards 29
6.4.3 Extension card for analogue clocks 30
6.4.4 Serial extension card 31
6.5 Insertion of GPS receiver 31
6.5.1 Select GPS receiver 31
6.5.2 Setting of baud rate 32
6.5.3 Synchronisation of the clock with GPS signal 32
6.5.4 Setting of synchronisation rate 33
6.6 Programming summary 34
7 Trouble shooting 35
8 Maintenance 36

9 Annex 38
9.1 Dimension drawings 38
9.1.1 Wall-mounting case 38
9.1.2 Flush-mounting case 40
9.1.3 19” Rack unit 43
9.2 Terminal plans 46
9.2.1 Terminal plan for the standard version 46
9.2.2 Terminal board of the extension cards 47
9.3 Block diagram 48
9.4 Circuit boards 49
9.4.1 Main board 49
9.4.2 Display and control board 50
9.4.3 Oscillator board 51
9.4.4 Terminal strip board (wall-mounting version) 52
9.4.5 Terminal strip board (console-mounting version) 52
9.5 Extension cards 53
9.5.1 SIO Serial interface in-out board (optional) 53
9.5.2 Digital secondary clocks extension card - – out (optional) 54
9.5.3 Analogue secondary clocks extension card – out (optional) 55
9.5.4 MOBALine secondary clocks extension card – out (optional) 56
9.6 Interface protocols 57
9.6.1 Standard protocol main clock 20097 (terminal 13 / 37) 57
9.6.2 Protocol ITRON Interface RS422/485 58
9.6.3 Protocol ITRON 2000 Interface RS422/485 59
9.6.4 Protocol NMEA $ZCZDA 60
9.6.5 Protocol ECHO 61
9.6.6 Protocol IMA51 62
9.6.7 Protocol GORGI 63
9.6.8 Protocol MITEL 64
10 Certificates 65
11 Modification history 68
12 Subject index 69
Notice **71**

1 General Information

1.1 Information on the operating instructions

These operating instructions describe how to install, operate and maintain the main clock. In order to use the unit properly it is absolutely necessary to follow the safety instructions and operating guidelines provided in this document.

The operating instructions are part of the product and need to be kept close to the unit so that they are at any time within reach of the installation, operation, maintenance and cleaning staff. If the unit is passed on to a third party, the operating instructions have to be handed over as well.

1.2 Explanation of the symbols

Important safety and unit-related notices are marked by symbols in these operating instructions. These instructions need absolutely to be observed to prevent any damage of the unit.

CAUTION! Risk of injury!

This symbol signalises risks that might cause injury.

You should absolutely follow these operational safety instructions and proceed with special care.

ATTENTION! Material risk!

This symbol signalises instructions which non-observance might result in damage, malfunction and/or breakdown of the unit.

NOTICE!

This symbol indicates tips and information, which need to be observed for the efficient and failure-free operation of the unit.

1.3 Liability and guarantee

All information and instructions given in these operating instructions were compiled taking into account the applicable regulations, the current engineering state-of-the-art as well as our knowledge and experience of many years.

The translations of the operating instructions were as well produced to the best of our knowledge. The German version of these operating instructions delivered with the unit is regarded as authentic text.

The actual scope of delivery may differ from the descriptions and illustrations provided in this manual in case of modifications made according to buyer's specifications or if additional technical features have been ordered.
Should you have any questions, please contact the manufacturer.

NOTICE!

Please read these operating instructions thoroughly before starting to operate and to use the unit, especially before putting it into operation! The manufacturer does not assume any liability for any damage or malfunction caused by non-observance of the operating instructions.

1.4 Copyright protection

The operating instructions have to be kept in confidence. They are only meant for the staff responsible for the unit or charged with its operation or maintenance. It is not permitted to pass on the operating instructions to a third party, unless prior written approval. If necessary, please contact the manufacturer.

NOTICE!

The contents, texts, drawings, pictures and other illustrations are protected by copyright and other industrial property rights. Any kind of misuse is regarded as an offence and liable to prosecution.

Any kind of copies, also in extracts, as well as the utilisation and/or publication of the content is not allowed, unless prior written approval of the manufacturer. Violators will be liable to pay damages. The manufacturer reserves the right to make further claims.

1.5 Transport

ATTENTION! Material risk!

Move the unit always with outmost care.

Check the consignment immediately upon receipt for completeness and damage during transport.

Should there be an obvious transport damage, do not accept the consignment for delivery or only under reservation. Note down the extend of the damage on the forwarder's transport documents / the delivery note and make a complaint.

A complaint shall be made immediately if hidden defects are ascertained because compensation can only be claimed within the valid complaint period.

1.6 Packaging

If no arrangements have been made for taking back the packaging, please separate the materials by kind and size for further use or waste recycling.

NOTICE! Environmental caretaking!
Packaging materials are made of valuable resources and can often be used again or processed and recycled in a sensible way.

1.7 Storage

Always store the unit in its packaging until installation.

The unit shall be stored as follows:

– Keep it at a dry place. Relative humidity: 60 % at maximum.
– Do not store it outside or in an aggressive atmosphere.
– Protect it from direct sunlight. Storage temperature: 15 to 25 °C (59 to 77 °F)
– Store it dust-free and avoid mechanical shocks or damages.
– Do not store it beneath other items and do not charge it with other items.
– In case of a storage period of more that approx. 3 months, check necessary mothballing measures.

1.8 Disposal

If no arrangements have been made with the manufacturer for taking back the unit, dismount it in accordance with applicable safety and environmental protection regulations for disposal and recycling of suitable components.

- Metal residues to be sent to be scrapped.
- Plastic components to be recycled.
- Separate the remaining components by material and dispose of them.

ATTENTION! Environmental risk!
Electronic components and batteries are hazardous waste and have to be treated by approved hazardous waste disposal sites!

2 Safety

All important safety aspects are summarized in this section for a safe and failure-free operation of the unit.

The individual chapters contain in addition specific instructions marked by symbols. Furthermore, the inscriptions on the unit need to be observed and should always be kept in legible condition.

2.1 General information

The unit is designed and manufactured according to the state-of-the-art of good engineering practice and is safe to operate.

However, the unit might represent a risk if it is not appropriately operated or not operated in accordance with the regulations by persons lacking corresponding training.
Every person charged with the operation of the unit, shall read and understand the operating instructions prior to operate the unit. We recommend the operator to request its staff to confirm in writing that they are aware of the operating instructions.

Any kind of modification, alteration or extension of the unit is prohibited.

The indicated range of settings and operating conditions shall be kept.

2.2 Intended use

The safe operation is only guaranteed provided that the unit is used for its intended use and according to the instructions.

The digital main clock 20097 is intended for the central control of secondary clocks and/or secondary clock systems with impulses of 12V or 24V for the synchronised indication of time and date.

! ATTENTION! Material risk!

Any other use of the unit in excess of the intended use as described above and/or differing form the intended use is prohibited and is regarded as improper use.

Any kind of claim against the manufacturer and/or its agent due to loss or damage resulting from improper use is excluded.

The operator is solely liable for any loss or damage due to improper use.

The proper and intended use also refers to the correct compliance with the instructions for installation, operation and cleaning.

2.3 Operator’s responsibility

These operating instructions shall be kept close to the unit so that they are at any time within reach of the installation, operation and maintenance staff.

The operator and his authorized staff are responsible for the failure-free operation of the unit as well as for the unequivocal appointment of responsibilities for installation, operation and maintenance of the unit.

The unit shall only be used if its condition is faultless and safe to operate.

The instructions given in this operating manual are to be followed in their entity and without exception.

2.4 Installation and operating staff

The unit shall only be installed and operated by authorized and trained staff or other qualified personnel.

Any staff member that has been previously informed about the tasks assigned to him or her as well as the possible risks in case of improper conduct and who has been trained appropriately if necessary and who as been instructed about the necessary safety dispositions and measures is regarded as trained staff.

Qualified staff is defined as any person who is able to evaluate the tasks assigned to him/her and to realize any possible risk due to his/her professional training, knowledge and experience as well as knowledge of the applicable regulations.

The operating company and the operating staff are equally responsible to make sure that no non-authorized person operates or handles the unit. The operating staff is obliged to inform the operating company without delay about any change of the unit, which could affect its functioning or safety.

3 Technical Data

3.1 General Data

case	material: plastic (RAL 7035) protection type: IP54 mounting: wall-mounting or console-mounting version
dimensions	wall-mounting case (incl. terminal box): width: 257 mm, height: 217 mm, depth: 125 mm console-mounting case (incl. terminals): width: 257 mm, height: 156 mm, depth: 142 mm
weight	wall-mounting case: 2,7 kg console-mounting case: 1,7 kg
display	alphanumeric LC-display with 20 digits switch-on/switch-off and dimmable display illumination
control	processor-controlled C-MOS technology
oscillator	quartz-controlled with temperature compensation accuracy: 0,05 s/24 h
PPS signal	The PPS impulse length should not be longer then 100ms and should be at least 200ms send before the NMEA protocol.
interfaces	serial RS485 interface with standard protocol GPS input RS422 & PPS input for synchronisation 2 relay outputs for alarm annunciators further optional interfaces
secondary clocks	up to 100 fwd. and 50 fwd. and bwd. adjustable clocks analogue: all common clocks for 12V or 24V impulses digital: with suitable extension card (optional)
time adjustment intervals	± 1 min or in preset steps between 1 and 99 min

3.2 Electrical Data

power supply	24 V DC, 300 mA
power reserve main clock	4 h (12 V accumulator with 0,7 Ah)
connections	48-pole terminal strip cable entry by VG screw connections

impulses to secondary clocks	12 V or 24 V for MOBALine option: 15 V (50 Hz)
relay outputs	max. 125 V / 0,5 A

4 Design and function

4.1 Design

4.1.1 Front view

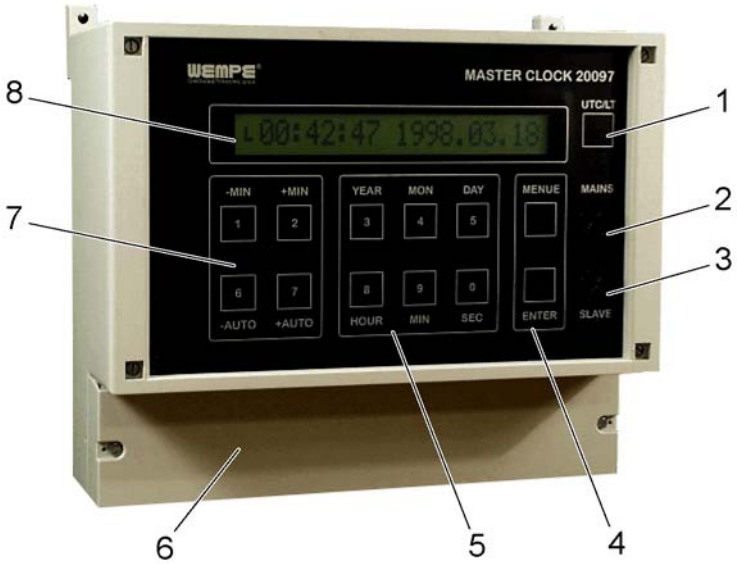

Ill. 1: Front view (wall-mounting case)

1 shift-key coordinated universal time (UTC) / local time (LT)
(→ see also "operation", "select time display")

2 main fuse ("MAINS") medium blow 1,0 A
for fuse protection of the internal circuit (→ see also "accessories")

3 secondary clocks fuse ("SLAVE") medium blow 2,5 A
for fuse protection of the power supply circuit (→ see also "accessories")

4 control and confirmation key
to select and confirm menu and setting functions

5 input field for the basic setting
for the basic settings and to adjust the menu and setting functions

6 terminal box
incl. terminal strip and accumulator (→ see also "maintenance")

7 input field for setting of time
for gradual setting of time and to adjust the menu and setting functions

8 dimmable display
(→ see also "operation", "switch on/off, adjust display illumination")

4.1.2 System overview

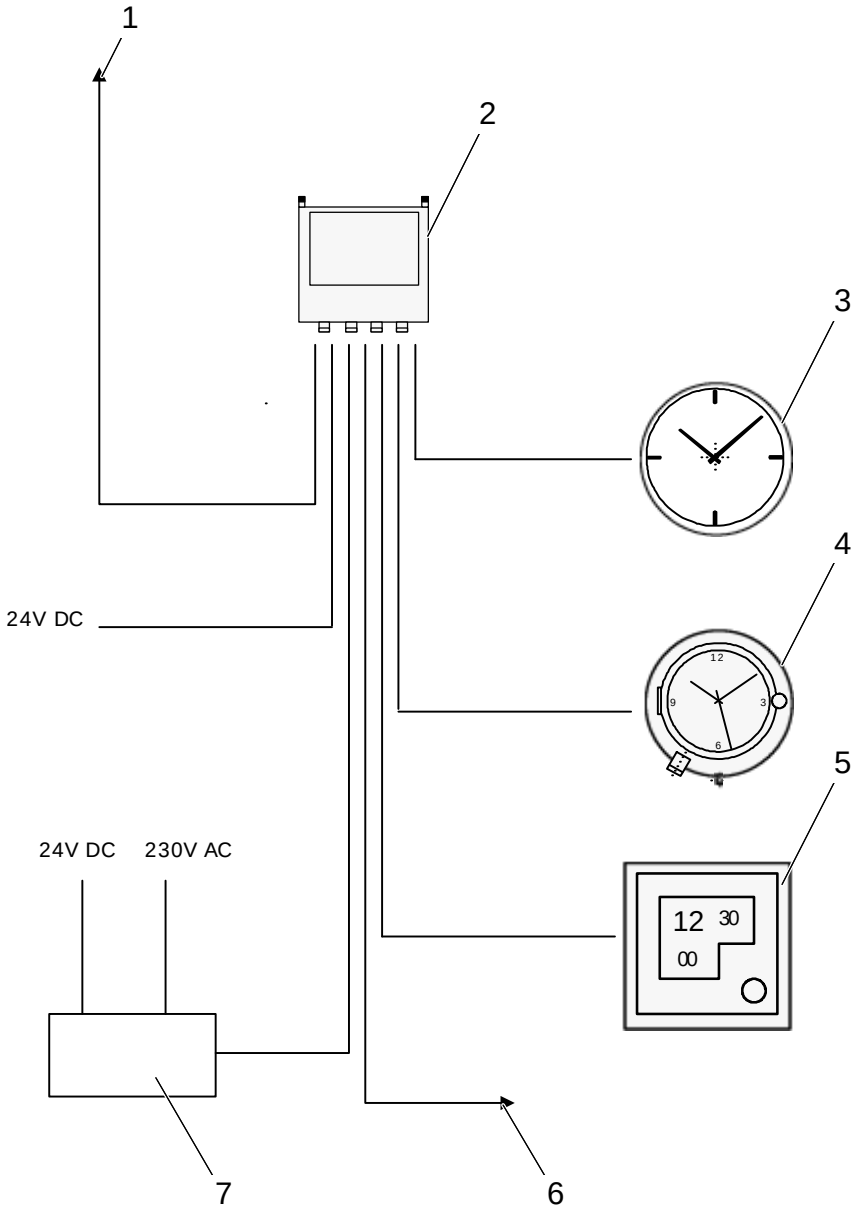

Ill. 2: System overview

1 GPS or DCF77 connection
2 digital main clock 20097
3 analogue secondary clocks
4 analogue secondary clocks with seconds display
5 digital secondary clocks (optional)
6 external interface
7 external mains adaptor

4.2 Mode of operation

The main clock 20097 controls and operates analogue (optionally as well digital) secondary clocks by impulses.
A highly precise quartz-controlled oscillator with an average accuracy of ± 0,05 s/24 h provides the control pulse for the main clock's UTC. Or if a GPS receiver is connected its receiver signal provides the control pulse.

When travelling through different time zones, the LT of the main clock has to be adjusted manually. Analogue secondary clocks are readjusted automatically after the preset interval. MOBALine-secondary clocks set themselves automatically after 3-4 s. Digital secondary clocks adopt the modified LT without time delay.

4.3 Accessories

4.3.1 Secondary clocks

We offer a wide range of secondary clocks. Please contact us for a presentation of our assortment.

4.3.2 Extension cards

Depending on the customer's specification, the following extension cards are included in the delivery or optionally available (→ see also "Appendix", section "Extension cards"):

- digital clocks extension card
  for the operation of digital secondary clocks
- MOBALine extension card
  for self-adjusting secondary clocks
- analogue clocks extension card
  for the operation of more than 100 forwards or 50 forwards and backwards running analogue secondary clocks.
- serial extension card
  for the operation of two different protocols with a differing data frame

4.3.3 Accumulator

The unit is fitted with an accumulator as power reserve. Only when the accumulator is completely discharged, the clock switches itself off automatically.

The following accumulator types are used:

- pbq VRLA accumulator 0.8-12
- Le Long WP0.8-12
- or comparable accumulators with identical performance

☞ *NOTICE!*

Do only use these accumulator types or comparable accumulators when replacing the accumulator (see also section "Maintenance").

4.3.4 Fuses

Main fuse ("MAINS") medium blow 1,0 A (DIN 41571; 5x20 mm)

The main fuse protects the internal processor circuit, the oscillator and the accumulator charge circuit.

In case of a failure of the main fuse, the main clock switches over to the internal accumulator power supply. The display shows the error symbol "**E**" (→ see also "troubleshooting").

Secondary clocks fuse ("SLAVE") medium blow 2,5 A (DIN 41571; 5x20 mm)

The secondary clocks fuse protects the external power supply circuit of the digital secondary clocks, the data outputs of all standard and extension cards as well as the internal interface and the power supply circuit of the display illumination.

In case of a failure of the secondary clocks fuse, the power supply of the secondary clocks is interrupted and they stop running. The display shows the error symbol "**E**" (→ see also "troubleshooting").

5 Installation and putting into operation

5.1 Safety

CAUTION! Electric energy hazard!

The improper installation of the electrically operated main clock may cause injuries or damages of the unit. For that reason:

– The unit shall be installed in accordance with the safety regulations by trained staff qualified in electrical engineering only!

– Before starting with the installation, make sure it is volt-free and prevent any possibility of reconnection!

5.2 Requirements on the place of installation

The clock's construction is shake and shockproof. Nevertheless, the following conditions apply when choosing an installation place:

– no direct sunlight

– ambient temperature: 0-40 °C

– max. relative humidity 0-90 % without condensation

Special care has to be taken for the wall-mounting version:

ATTENTION! Material risk!

The mounting place has to be chosen so that the main clock does not obstruct any motion areas of objects (e.g. doors) or people.

5.3 Installation

5.3.1 Wall mounting

1. Prepare the wall holder according to the drilling template.

   NOTICE!
   Size the drill hole diameter for M4 thread screws (e.g. for mounting on a metal wall) or for 4x30 wood screws (for mounting on a wooden wall).

   Use the lower drill hole at position (A) to place the wall hook on the top, in the middle.

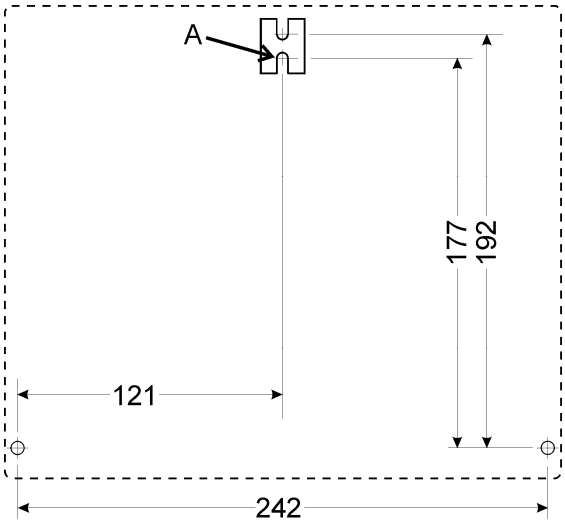

Ill. 3: Drilling template for the wall holder

2. Fix the wall hook on the wall so that the main clock can be safely fitted at the upper middle position (→ position A).
3. Unscrew both crews of the main clock's terminal box cover and remove the cover.
4. Fit the main clock on the wall hook. Pay attention that the main clock stays reliably on the wall, if necessary readjust the wall holder.
5. Insert a thread screw M4 (or a wood screw 4x30 in case of mounting on a wooden wall) in the left and right fitting hole (B).

Ill. 4: Fitting holes (B)

6. Make sure that the main clock hangs safely and reliably on the wall, then place the cover back on the terminal box and tighten both screws carefully (tightening torque max. 5 Nm!) until the connection box is securely closed. Ensure protection class IP 54!

5.3.2 Console mounting

1. Prepare the switchboard cut-out according to the illustration.

NOTICE!

Size the drill hole diameter for M4 thread screws.

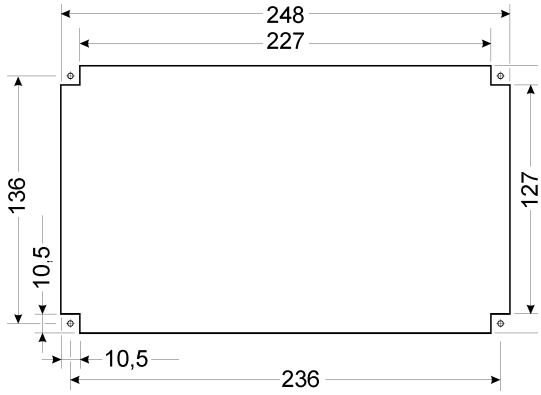

Ill. 5: Switchboard cut-out

2. Insert the main clock from above into the switchboard cut-out.
3. Place M4 thread screws from above into the edges of the main clock and fit them tightly from the backside of the switchboard with washers and nuts.
4. Make sure that the main clock holds reliably and safely on the console.

5.4 Fitting of cables

5.4.1 Fitting of cables at the wall-mounting version

1. Unscrew both screws of the main clock's terminal box cover and remove the cover.
2. Pierce a pre-cut hole for the cable entry from the bottom to the inside. Clean the cable hole.

NOTICE!

It is also possible to place the cable entry on the back of the main clock. For this effect:

a) Dismount the main clock in reverse order from the wall. (→ 5.3.1 Wall mounting).

b) Pierce a pre-cut hole from the back to the inside.

c) Clean the cable hole. Insert the cable according to the following description.

d) Mount the main clock back on the wall.

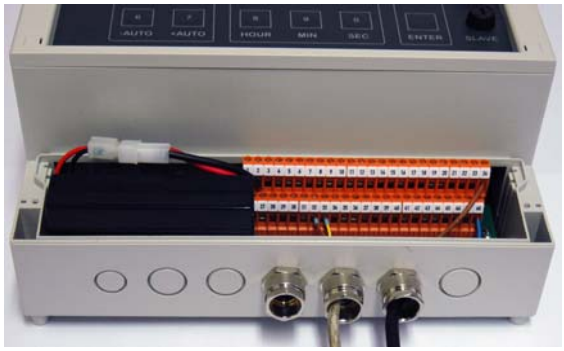

Ill. 6a: pre-cut holes on the bottom

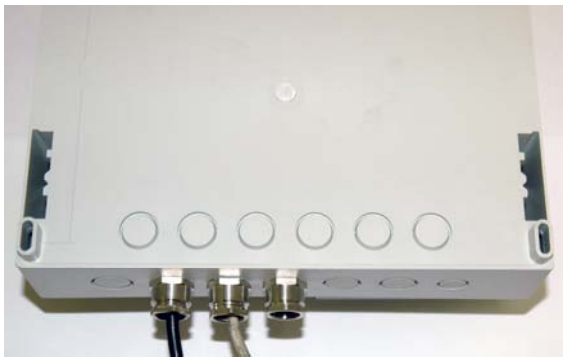

Ill. 6b: pre-cut holes on the back

3. Set the matching PG screw connection for the cable to be fitted into the cable hole.
4. Insert the cable through the PG screw connection into the terminal box.
   Make sure that the hole is tightly closed. Ensure protection class IP 54!
5. Fix the cable leads to the corresponding terminals of the terminal strip.
6. Put the cover back on the terminal box and tighten both screws carefully (tightening torque max. 5 Nm!) until the connection box is securely closed. Ensure protection class IP 54!

5.4.2 Fitting of cables at the console-mounting version

Electric cables are connected to the terminal strip on the back of the main clock. The cable has to be laid and fixed in the console in a way that it does not rip off when the console is opened or that the cable, the terminal strip and the fasteners are not otherwise damaged.

Make sure that the cables, the terminal strip and the fasteners do not rip off, are not jammed, squeezed or otherwise damaged when the console is closed. Ensure protection class IP 54!

5.5 Electrical connection

1. Fit the cable for the power supply (→ 5.4 Fitting of cables).
2. Connect the +24V lead of the power supply cable and the 0V lead to terminal 48. Make sure that the polarity of the leads is correct and they are connected firmly to the terminal.
3. Fix accumulator 12V/0,7Ah
   - Wall-mounting version:
     Place the accumulator on the bottom, left-hand side of the terminal box.
   - Console-mounting version:
     Place the accumulator in the holder on the case back.
4. Connect the accumulator via the plug connection or connect the lead of the plus-electrode (+) to terminal 1 and the lead of the minus-electrode (-) to terminal 2. Make sure that the polarity of the leads is correct and they are connected firmly to the terminal
5. Close the electrical connections (→ 5.4 Fitting of cables). Ensure protection class IP54.

5.6 Connection of secondary clocks

The standard version of the main clock can control up to 100 forward and up to 50 forward and backward adjustable secondary clocks. All common secondary clock systems for 12V or 24V impulses can be connected.

The MOBALine secondary clocks are powered with 15V/50Hz AC-voltage by the main clock via a 2-wire conductor. At the same time the current time is transmitted by means of amplitudes/frequency modulation. Time adjustments effected on the main clock, are automatically recognized by the secondary clocks and reproduced.

If several secondary clocks are to be connected, they have to be connected in parallel first via a power distribution system. The power distribution system is then connected to the main clock via a supply line.

1. Fit the cables for the secondary clocks supply line. (→ 5.4 Fitting of cables)
2. Fix the leads of the secondary clock's supply line to the corresponding terminals (either to terminals 7 and 9 or terminals 32 and 33, for MOBALine extension additionally terminals 20 and 44) according to the terminal plan (→ annex). Make sure that the leads are connected firmly to the terminals.
3. Close the electrical connections (→ 5.4 Fitting of cables). Ensure protection class IP54.

5.7 Connection of GPS receiver

The main clock can adopt the time signal of a GPS receiver.

All types of GPS receivers supporting the "NMEA 0183 Version 2.0" standard are included in the basic configuration (for example: MAGNAFOX and LEICA).

Receiver types from other manufacturers can be installed. The description of the output protocol of the corresponding GPS receiver is needed for this purpose.

1. Fit the cables for the GPS receiver supply line (→ 5.4 Fitting of cables)
2. Fix the leads of the GPS receiver supply line according to the terminal plan to the terminals 15 and 16 as well as to the terminals 40 and 41. Make sure that the leads are connected firmly to the terminals.
3. Close the electrical connections (→ 5.4 Fitting of cables). Ensure protection class IP54.

5.8 Putting into operation

When delivered, the main clock is equipped, pre-set and pre-installed according to the basic configuration that was ordered. Once the connections are fitted, the main clock is ready for operation.

Future modifications of the main clock and the secondary clock system are carried out by means of the menu functions.

Putting into operation the main clock:

1. Make sure that the polarity of all cable connections is correct, that the connection is tight with a reliable contact.
2. Switch on the power supply. The following line appears on the display:

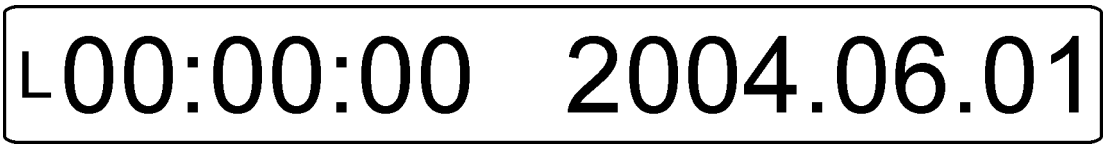

Ill. 7: Start display

L	Indication of the selected time. After switch-on, the main clock is set to **L**ocal **T**ime.
00:00:00	Indication of time. After switch-on, the main clocks starts to run at 0 o'clock.
2004.06.01	Indication of date. After switch-on, the creation date of the software is indicated.

6 Operation

6.1 Make basic settings

After having switched on the power supply, the main clock starts running immediately and the start display appears (→ "Putting into operation").
In order to use the further functions of the main clock, it is necessary to enter the current data (coordinated universal time/ local time / date) first.

6.1.1 Unlock the keyboard

The keyboard is locked to prevent maloperation.

1. Press the **MENUE** key for at least 4 seconds until the version number appears on the display.
2. Press the key **2** once.
3. Press the **ENTER** key until the message on the right appears :

   Keyboard unlocked

   The keyboard is now unlocked.
4. Press the **MENUE** key to return to the time display.

6.1.2 Select indicated time

The first symbol on the display shows which time is selected for indication.

"L" = indication of the local time

"U" = indication of the coordinated universal time

With the key **UTC/LT** on the right, next to the display you can switch from LT (Local Time) to UTC (Coordinated Universal Time) and vice versa.

6.1.3 Setting of time

In the following the setting of the main clock time is described.

1. Select the indicated time (→ 6.1.2)
2. Press at the same time the **ENTER** key and one of the following number keys:
   - **ENTER** + **8** to set the hour
   - **ENTER** + **9** to set the minute
   - **ENTER** + **0** to set the second

Setting of the secondary clocks → see 6.3.

6.1.4 Setting of date

1. Select the indicated time (→ 6.1.2)
2. Press at the same time the **ENTER** key and one of the following number keys:
   - **ENTER** + **3** to set the year
   - **ENTER** + **4** to set the month
   - **ENTER** + **5** to set the day

NOTICE!
The data transmitted by the interface RS422/485 is also based on this settings. UTC as well as LT and date are transmitted and must thus be set correctly.

6.1.5 Setting of automatic time adjustment

In order to adjust the local time to the current position the main clock is equipped with an automatic time adjustment function that adjusts the time forwards or backwards in preset intervals of up to 99 minutes. This value is pre-set to 20 minutes upon delivery of the unit.

1. Press the **MENUE** key for at least 4 seconds until the version number appears on the display.
2. Press the key **2** several times until the Automatic setting menu (→ Ill.) appears on the display:

   Automatic: 20

3. Press the **ENTER** key to confirm the selection. The minutes display is flashing.
4. Press key **1** or key **2** to modify the set value in intervals of 1 minute.
5. Press the **ENTER** key to confirm the new entry.
6. Press the **MENUE** key to return to the time display.

6.1.6 Switching on/off and adjusting of display illumination

1. Press the **ENTER** key and the **UTC/LT** key at the same time to switch the illumination on or off.

The brightness of the illumination is pre-set by the manufacturer to the highest value (10).

Change the brightness of the illumination:

1. Press the **MENUE** key for at least 4 seconds until the version number appears on the display.
2. Press the key **1** until the dimmer menu (→ Ill.) appears on the display:

   Dimmer 10

3. Press the **ENTER** key to confirm the selection. The pre-set value is flashing.
4. Press the key **1** or **2** to modify the value continuously.
5. Press the **ENTER** key to confirm the newly set value.
6. Press the **MENUE** key to return to the time display.

6.1.7 Lock the keyboard

In order to prevent maloperations lock the keyboard after having finished the setting.

1. Press the **MENUE** key for at least 4 seconds until the version number appears on the display
2. Press the key **2**. The message on the right appears:

   Keyboard unlocked

3. Press the **ENTER** key. The message on the right appears:

   Keyboard locked

   The keyboard is now locked.
4. Press the **MENUE** key to return to the time display.

6.2 Additional settings

6.2.1 Remove write protection for additional settings

The additional settings of the main clock are protected by a password.

The password is "345", unless a different password has been stipulated. If a different password is pre-configured, this is indicated on a sticker on the last page of this manual.

Remove write protection:

1. Press the **MENUE** key for at least 4s until the version number appears on the display.
2. Press the key **1** several times until the message on the right appears on the display:

   Menue change locked

3. Enter the safety code to remove the write protection.
4. Press the **ENTER** key for confirmation. The message on the right appears on the display :

   Menue change unlocked

The write protection for the additional settings is now removed.

NOTICE!

When quitting the setting menu, the write protection is automatically activated again.

6.2.2 Setting of adjustment frequency for analogue secondary clocks

If the local time is modified, the time of the analogue secondary clocks is automatically adjusted within short. The standard setting of the main clock is 4Hz (4 impulses per second).

Setting of the adjustment frequency:

1. Remove write protection (→ 6.2.1).
2. Press the key **1** several times until the message on the right appears on the display:

   Analogclockrate: 04Hz
3. Press the **ENTER** key for confirmation. The cursor starts flashing.
4. Press the key **1** or **2** to modify the set value gradually.
5. Press the **ENTER** key to confirm the modification.
   To cancel the modification, press the **MENUE** key twice.
6. Press the **MENUE** key to return to the time display.

6.2.3 Setting of impulse width

The default setting upon delivery of the impulse width of the analogue lines is ¼ s (pulse width of the output impulse = 250ms). If a higher adjustment frequency than 1/impulse width is set, the main clock automatically limits the maximum pulse width.

Setting of the impulse width:

1. Remove write protection (→ 6.2.1).
2. Press the key **1** several times until the message on the right appears on the display:

   Analogpulsleng.: 1/4 Sec
3. Press the **ENTER** key for confirmation. The cursor starts flashing.
4. Press the key **1** or **2** to modify the set value gradually.
5. Press the **ENTER** key to confirm the modification.
   To cancel the modification, press the **MENUE** key twice.
6. Press the **MENUE** key to return to the time display.

6.2.4 Setting of analogue lines

Two analogue lines are available:

LT: local time secondary clocks
SE: seconds secondary clocks
UT: UTC secondary clocks
f: forwards running
fb: forwards and backwards running
M: minutes (or seconds) impulses
H: ½ minute (½ second) impulses
G: GORGITIME / 24-hour display

Ana.-Line 1: LT-f -M

Ana.-Line 2: SE-f -M

Setting of the analogue line:

1. Remove write protection (→ 6.2.1).
2. Press the key **1** several times until one of the analogue line setting menus appears on the display, for example:

   Ana.-Line 1: LT-f -M

3. Press the **ENTER** key for confirmation. The line number starts flashing.
   (The analogue line that needs to be modified, can only be selected once again with the key **2** if it has not been correctly selected in the main menu).
4. To make the desired settings of the analogue line:

– press the key **3** to set an UT, LT or seconds line.

– press the key **4** to merge two lines to one forwards and backwards running line.

NOTICE!

This setting option is only possible for line 1. After having merged the two lines, settings for line 2 are no longer indicated in the main menu.

– Press the key **5** to set whether the output impulses are to be transmitted every minute (second) "**M**" or every half-minute (second) "**H**".

Example for a forwards running secondary clock line (local time) with minutes impulse:

Ana.-Line 1: LT-f -M

5. Press the **ENTER** key to confirm the modification.
   To cancel the modifications, press the **MENUE** key twice.
6. Press the **MENUE** key to return to the time display.

6.2.5 Setting of secondary clocks impulse voltage

1. Remove write protection (→ 6.2.1).
2. Press the key **1** several times until the message on the right appears on the display:

   Analogvoltage: 12 V

   (The default setting of the main clock is 12V for the secondary clock impulses.)
3. Press the **ENTER** key for confirmation. The voltage value starts flashing.
4. Press the key **3** to switch between 12V and 24V.
5. Press the **ENTER** key to confirm the modification.
   To cancel the modifications, press the **MENUE** key twice.
6. Press the **MENUE** key twice to return to the time display.

6.2.6 Setting of the internal standard interface

The default setting of the baud rate is 4800. The message on the right is indicated for information purposes:

Int. SIO 4800 Baud

6.2.7 Programming of relay outputs for error messages

The main clock is fitted with 2 relay outputs that can be programmed for the following error messages:

Supply:	power supply failure (24 V DC)
Ext. Fuse:	failure of the secondary clock fuse ("SLAVE")
Int. Fuse:	failure of the main fuse ("MAINS")
Low Batt.:	accumulator voltage too low

Programming of the relay outputs for the error messages:

1. Remove the write protection (→ 6.2.1).
2. Press the key **1** several times until one of the two relay setting menus appears on the display, for example:

   Relais 1: No
3. Press the **ENTER** key for confirmation. The cursor starts flashing.
4. Press the key **2** to select from among the possible errors.
5. Press the **ENTER** key to confirm the selection.
   To cancel the modification, press the **MENUE** key twice.
6. Press the **MENUE** key, to return to the date display.

6.3 Set-up of secondary clocks

1. Press the **MENUE** key for at least 4 s until the version number appears on the display.
2. Press the key **2** several times until the analogue time setting menu appears on the display.

   Analogtime
3. Press the **ENTER** key. The following display appears (for secondary clocks on the terminals 32 & 33):

   Analogtime: M1/L1

   For analogue secondary clocks on the terminals 7 & 8, press **1** or **2** once, until the message on the right appears on the display:

   Analogtime: M1/L2
4. Press the **ENTER** key. The following display appears:

   Analogtime: 00:00
5. Set all secondary clockss by hand to a standardised time (e.g. 12:00).

6. Set this time in the analogue time setting menu of the main clock with the keys **8** and **9 .**
7. Press the **ENTER** key for confirmation.
8. Press the **MENUE** key. The secondary clocks are synchronised automatically. The main clock and the connected secondary clocks are now set to an standardised time.
9. Press the **MENUE** key again to return to the time display.

6.4 Use of extension cards

The main clock detects automatically that extension cards are inserted in the slots. Inserted extension cards are automatically initialised and set-up according to their basic functions.

The extension card settings are also protected by the system's password.

Depending on the used slot, the number 2 – 4 is indicated after the term "Module".

6.4.1 Extension card for digital clocks

An extension card for digital clocks needs to be installed to operate digital secondary clocks.

Both times (UTC and LT) are always transmitted via the BCD code.
The standard display of digital WEMPE secondary clocks is LT. The display can be changed from LT to UTC manually by means of an internal jumper.

To change from the UTC date transmitted by default setting to the LT date, proceed as follows:

1. Remove write protection (→ 6.2.1).
2. Press the key **1** several times until the message on the right appears on the display:

   Modul X: Digi.-Line
3. Press the **ENTER** key for confirmation. The cursor starts flashing.
4. Press the key **2** to select UTC or LT date.
5. Press the **ENTER** key to confirm the modification.
   To cancel the modification, press the **MENUE** key twice.
6. Press the **MENUE** key to return to the time display.

6.4.2 MOBALine extension cards

If a MOBALine extension card for automatically adjusting secondary clocks is installed in the unit, it is not necessary to carry out any settings for the secondary clocks.

6.4.3 Extension card for analogue clocks

If an extension card for analogue clocks is installed in the unit, set the secondary clock line as follows:

Two analogue lines are available:

LT: local time secondary clocks
SE: seconds secondary clocks
UT: UTC secondary clocks
f: forwards running
fb: forwards and backwards running
M: minutes (or seconds) impulses
H: ½ minute (½ second) impulses
G: GORGITIME / 24-hour display

Setting of the analogue line:

1. Remove write protection (→ 6.2.1).
2. Press the key **1** several times until the following message appears on the display:

   Modul X: Ana.-Line

3. Press the **ENTER** key for confirmation. The line number starts flashing.
   (The analogue line that needs to be modified, can only be selected once again with the key **2** if it has not been correctly selected in the main menu).
4. To make the desired settings of the analogue line:

– press the key **3** to set an UT, LT or seconds line,

– press the key **4** to merge two lines to one forwards and backwards running line,

– press the key **5** to set whether the output impulses are to be transmitted every minute (second) "**M**" or every half-minute (second) "**H**".

Example for a forwards running secondary clock line (local time) with minutes impulse:

Ana.-Line 1: LT-f -M

5. Press the **ENTER** key to confirm the modification.
   To cancel the modifications, press the **MENUE** key twice.
6. Press the **MENUE** key to return to the time display.

6.4.4 Serial extension card

In case of an installed serial extension card, proceed as follows to set the protocol and desired data frame:

1. Remove the write protection (→ 6.2.1).
2. Press the key **1** several times until the message on the right appears on the display:

   Modul X: Serielle

3. Press the **ENTER** key for confirmation. The cursor starts flashing.
4. Press the key **2** to switch between the two interfaces of the serial extension card.
5. Press the key **3** to set the baud rate.
6. Press the key **4** to select the protocol.
7. Press the key **5** to set whether the protocol is to be sent every minute or every second.

   Example for interface 1:

   1: 19200, itron, Sec.

interface	baud rate	protocol	impulse

8. Press the **ENTER** key to confirm the modification.
   To cancel the modifications, press the **MENUE** key twice.
9. Press the **MENUE** key to return to the time display.

6.5 Insertion of GPS receiver

6.5.1 Select GPS receiver

1. Remove write protection (→ 6.2.1).
2. Press the key **1** several times until the message on the right appears on the display:

   GPS-System

3. Press the **ENTER** key to confirm. The cursor starts flashing.
4. Press the key **2** to switch between the GPS receivers.

☞ *NOTICE!*

The types "MAGNAFOX" and "LEICA" as well as other installed GPS systems are indicated in accordance with the basic configuration.

5. Press the **ENTER** key to confirm the modification.
   To cancel the modifications, press the **MENUE** key twice.
6. Press the **MENUE** key to return to the time display.

6.5.2 Setting of baud rate

1. Refer to the documentation of the GPS receiver for the data to be set.
2. Remove write protection (→ 6.2.1).
3. Press the key **1** several times until the message on the right appears on the display:

   GPS-Ser.

4. Press the **ENTER** key for confirmation. The cursor starts flashing.
5. Press the key **3** to set the baud rate.
6. Press the key **4** to modify the number of stop bits.
7. Press the **ENTER** key to confirm the modification.
   To cancel the modification, press the **MENUE** key twice.
8. Press the **MENUE** key to return to the time display.

6.5.3 Synchronisation of the clock with GPS signal

The PPS signal of the GPS receiver is necessary for the exact synchronisation of the main clock. The PPS impulse length should not be longer then 100ms and should be at least 200ms send before the NMEA protocol.

Additionally, a synchronisation without PPS impulse (NO PPS) can be activated for NMEA receivers.

1. Remove write protection (→ 6.2.1).
2. Press key **1** several times until the message on the right appears on the display:

   GPS-Sync.

3. Press **ENTER** key for confirmation. The cursor starts flashing.
4. Press the key **2** to select whether the data is to be adopted with the positive flank (Pos.) or with the negative (Neg.) flank depending on the GPS receiver.
5. Press the **ENTER** key to confirm the modification.
   To cancel the modifications, press the **MENUE** key twice.
6. Press the **MENUE** key to return to the time display.

☞ *NOTICE!*

After having finished the settings, the main clock automatically adopts the UTC and date. The LTC has possibly to be set by hand.

☞ *NOTICE!*

In case the receiver signal is interrupted, the main clock keeps running with a high accuracy thanks to its internal oscillator.

6.5.4 Setting of synchronisation rate

The use of GPS receivers without PPS impulse involves a risk in view of the correct synchronisation of the main clock.

All data frames that correspond to the usual layout are regarded as valid. For GPS receivers with an up-date rate of more than 1 second, this means for example that the receiver transmits the same time for up to 5 seconds and then makes a 5-seconds leap forwards. This results in leaps of the time indicated on the main clock and the secondary clocks and in some cases even a fast adjustment of the secondary clocks is carried out without interfering of the user.

In order to eliminate this source of error, modify the synchronisation rate as follows:

1. Remove write protection (→ 6.2.1).
2. Press the key **1** several times until the message on the right appears on the display:

   Sync once a day

3. Press the **ENTER** key for confirmation. The cursor starts flashing.
4. Press the key **2** to set whether data is to be synchronised once per second, minute, hour or day.

NOTICE!

During the period in between two synchronisations, the main clock runs with the accuracy of the internal oscillator.

5. Press the **ENTER** key to confirm the modification.
   To cancel the modifications, press the **MENUE** key twice.
6. Press the **MENUE** key to return to the date display.

NOTICE!

Although a "jumping" main clock display and fast adjustment of the secondary clocks does not occur anymore after having modified the synchronisation rate, it is nevertheless recommended to refit the PPS standard or to let the manufacturer of the GPS system activate at least a higher up-date rate.

6.6 Programming summary

chapter	function	value	date	signature
6.1.5	Automatic			
6.1.6	Dimmer			
6.2.2	Analogue Clock rate			
6.2.3	Analogpulsleng.			
6.2.4	Ana.-Line 1			
6.2.4	Ana.-Line 2			
6.2.5	Analogue Voltage			
6.2.7	Relay 1			
6.2.7	Relay 2			
6.4.1	Module X: Digi.-Line			
6.4.2	Module X: MOBALine			
6.4.3	Module X: Ana.-Line			
6.4.4	Module X: Serial			
6.5.1	GPS-System			
6.5.2	GPS-Ser.			
6.5.3	GPS-Sync.			
6.5.4	Sync. once a second			

serial number:	**software version:**

7 Trouble shooting

Values as the external supply voltage, the accumulator supply voltage and the fuses are automatically controlled by the main clock.

Should there be an error, the error symbol "**E**" is flashing in the time display (→ Ill.).

L 12:20:00 E 2005.07.01

In order to have the specific error indicated:

1. Press the **ENTER** key and keep it pressed down.
2. Press the **MENUE** key with the **ENTER** key pressed down, display:

   Error-Messages:
3. Press the **ENTER** key once again. the specific error message appears:

   Missing Supply

   Should there be several error messages, switch between the messages using the keys **1** or **2**.
4. Press the MENUE key to return to the time display.

The following error messages could be indicated. Fix the error as described in the column "remedy":

error message*	meaning	remedy
"Missing Supply"	breakdown of the 24 V DC power supply	restore the power supply
"Internal Fuse Fault"	failure of the main fuse ("MAINS")	replace the main fuse
"External Fuse Fault"	failure of the sec. clock fuse ("SLAVE")	replace the secondary clock fuse.
"Low Batt."	insufficient accumulator voltage	recharge accumulator by restoring power supply. Should the accumulator be low again after a short time, replace it.

*according to the basic configuration.

NOTICE!

Once the power supply is restored, the secondary clocks are automatically adapted to the current time.

Should you encounter an error that is not shown in the above error table, please contact one of the following service addresses :

Gerhard D. Wempe KG
Geschäftsbereich Chronometerwerke
Steinstraße 23
20095 Hamburg - Germany
phone: +49 – 40 – 33 44 8 - 199
fax: +49 – 40 – 33 44 8 – 676
e-mail: chrono@wempe.de
Internet: www.chronometerwerke.de

ITRON Elektronik
Willers OHG
Lindenstraße 2
29640 Schneverdingen - Germany
phone: +49 – 51 99 – 94 - 0
fax : +49 – 51 99 – 94 - 22
e-mail: service@itron.de
Internet: www.itron.de

8 Maintenance

The main clock is to a large extent maintenance-free. Nevertheless, it is necessary that the user carries out the following maintenance work.

Every 3 months:

Clean the main clock with a dry textile cloth.

ATTENTION! Material risk!

Never use any chemical detergents, alcohol or abrasives for the cleaning !

Every 2 years:

Replace the internal accumulator to maintain the emergency operating features of the main clock.

Accumulator replacement at wall-mounting version:

1. Unscrew the 2 screws (→ Ill. 8/1)
2. Remove the protection cover from the terminal strip (→ Ill. 8/2).
3. Unplug the connector (→ Ill. 9/1).
4. Strip off the accumulator (→ Ill. 9/2) from the Velcro tape fixed on the bottom of the case.
5. Remove the Velcro tape from the old accumulator and stick it to the lower part of the new accumulator.
6. Place the new accumulator in its position and secure it on the Velcro tape.
7. Plug the connector.

NOTICE!

It is only possible to plug the connector if the polarity is correct.

8. Replace the cover and screw in the screws.
9. Dispose of the old accumulator in an environmentally friendly way.

Ill. 8: Terminal strip cover

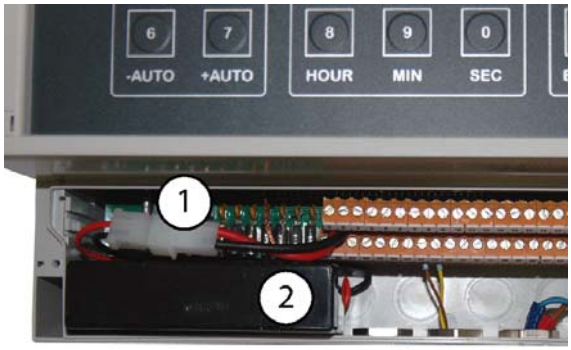

Ill. 9: Accumulator and connector

ATTENTION! Environmental risk!

Accumulators are hazardous waste and have to be treated by approved hazardous waste disposal sites!

Accumulator replacement at console-mounting version:

Ill. 10 : screw and connector

1. Unscrew the screws (M4 x 110 mm) on the back of the clock.
2. Unplug the connector.
3. Replace the accumulator.
4. Plug the connector.

! *NOTICE!*
It is only possible to plug the connector if the polarity is correct.

5. Tighten the screws.
6. Dispose of the old accumulator in an environmentally friendly way.

! **ATTENTION! Environmental risk!**
Batteries are hazardous waste and have to be treated by approved hazardous waste disposal sites!

After several years of use:

Give the main clock to a qualified workshop for readjustment of the oscillator. They will readjust the oscillator by means of trimming capacitors.

9 Annex

9.1 Dimension drawings

9.1.1 Wall-mounting case

Front view

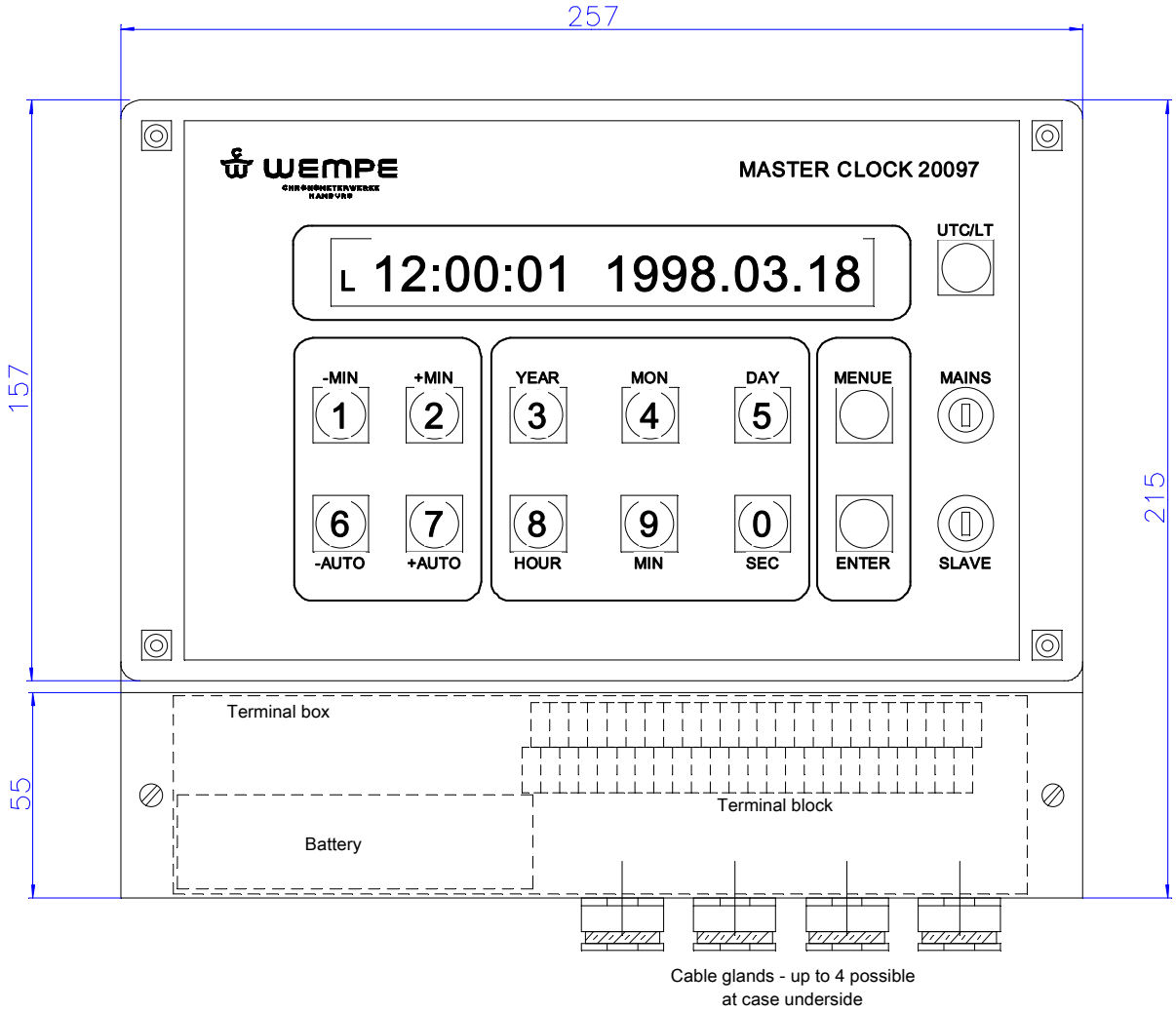

Side view

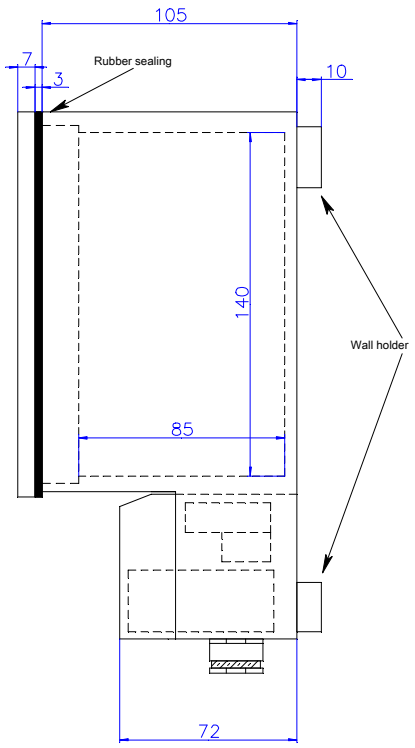

Back side view

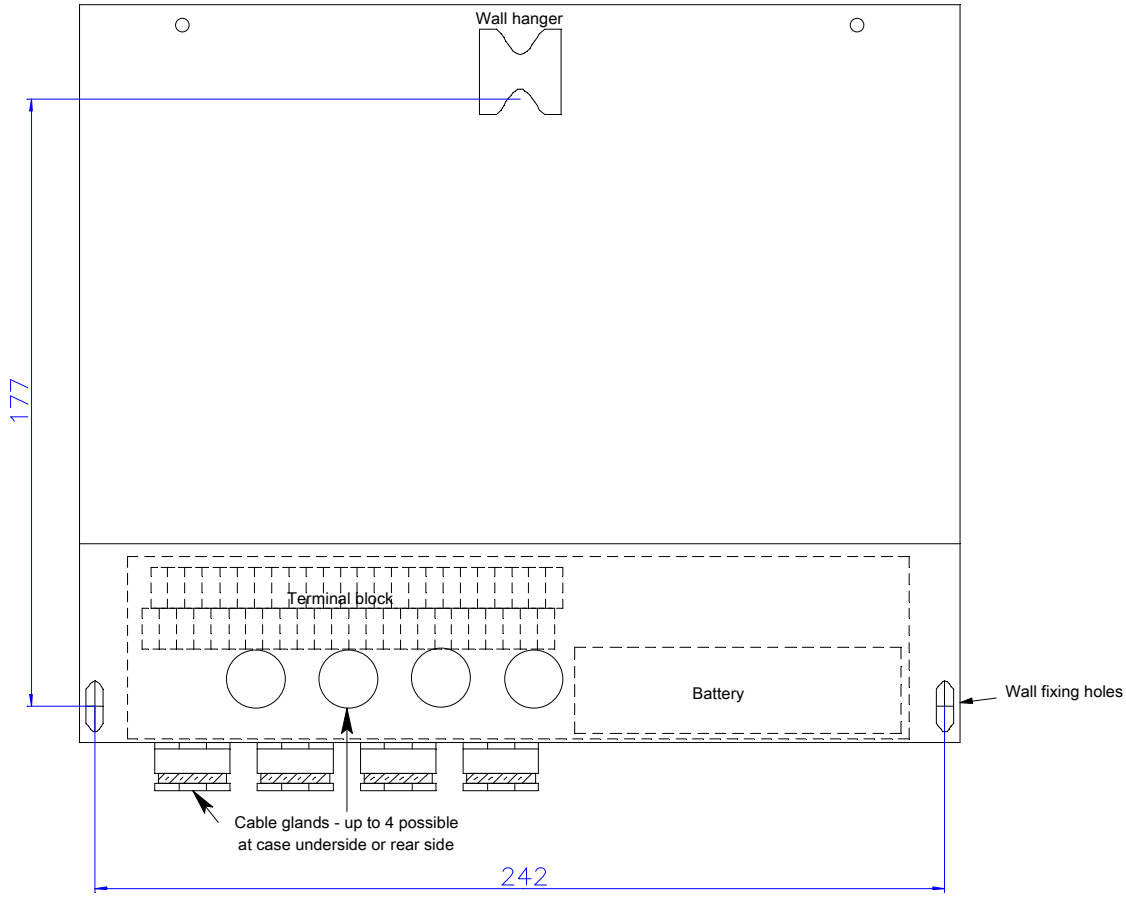

9.1.2 Flush-mounting case

Front view

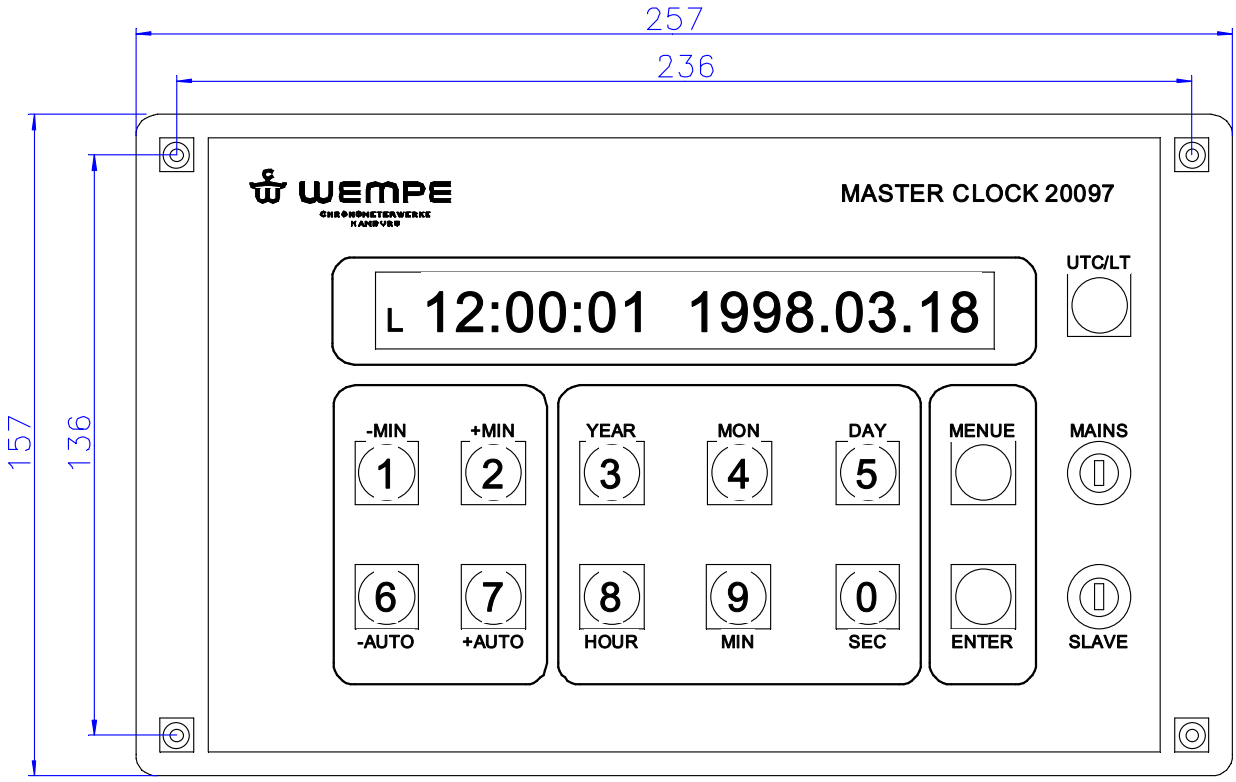

Side view

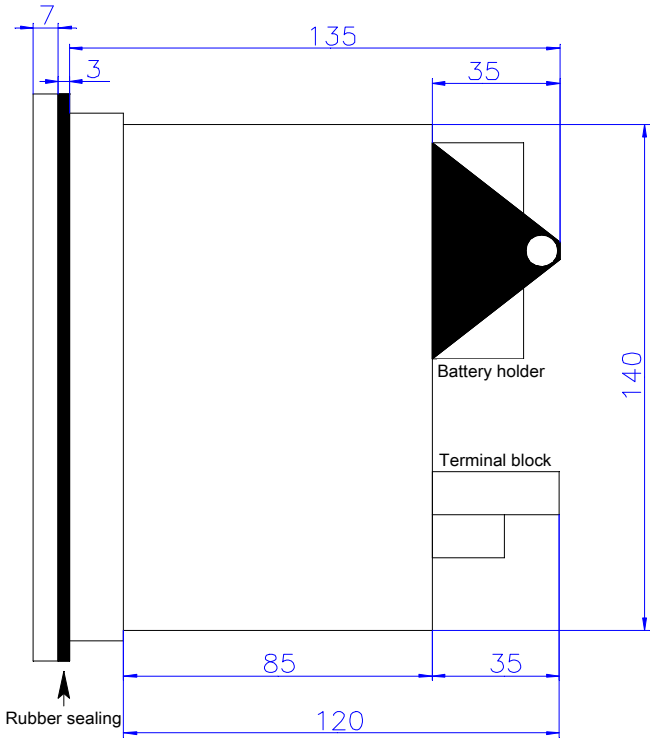

Back side view

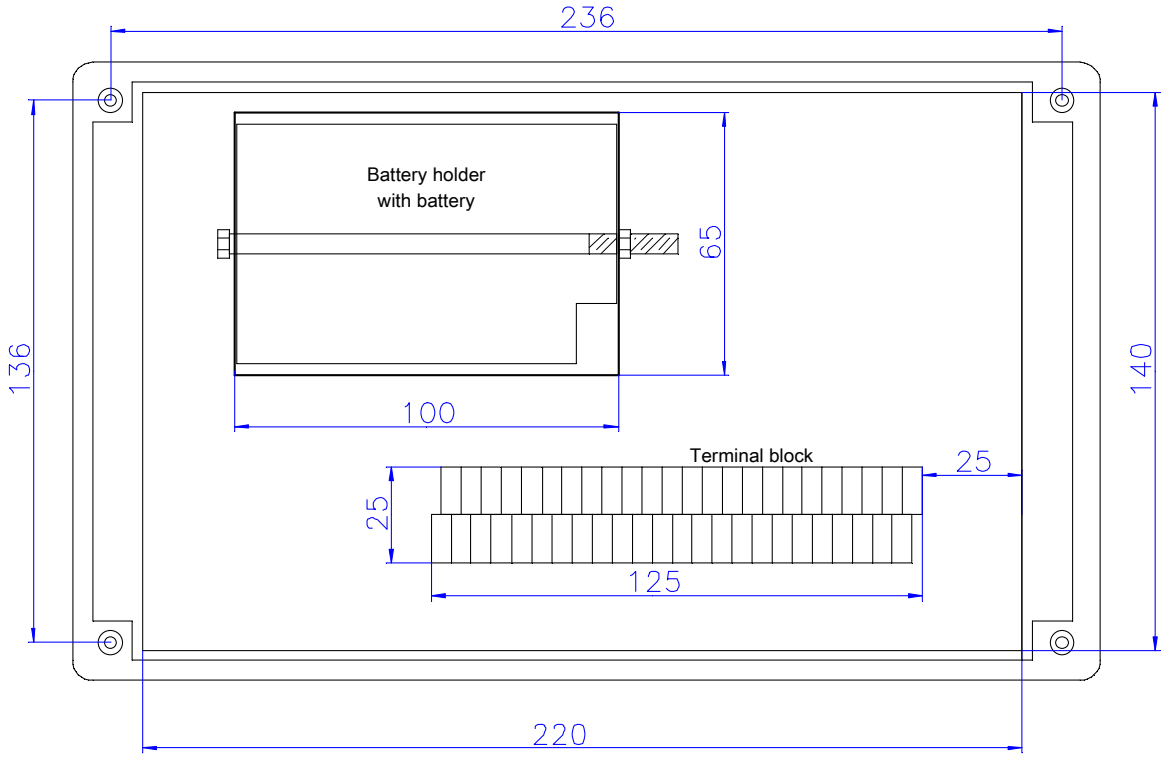

Panel cut-out

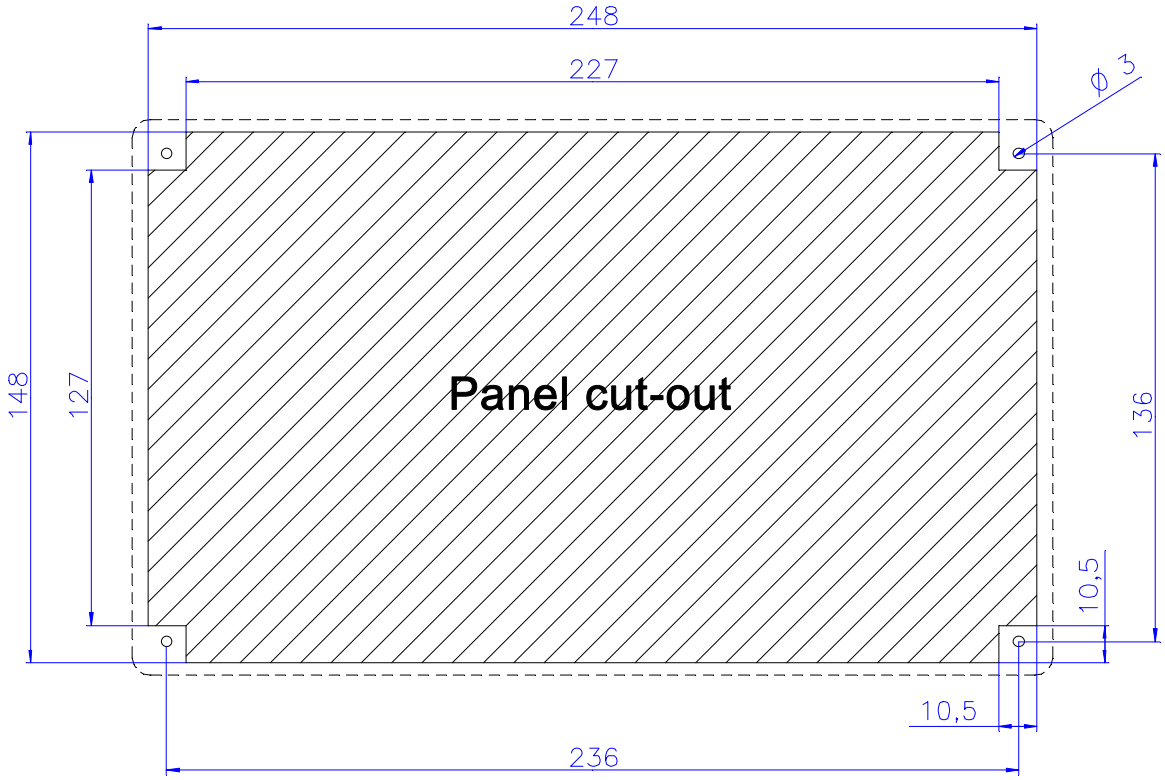

9.1.3 19” Rack unit

Front view

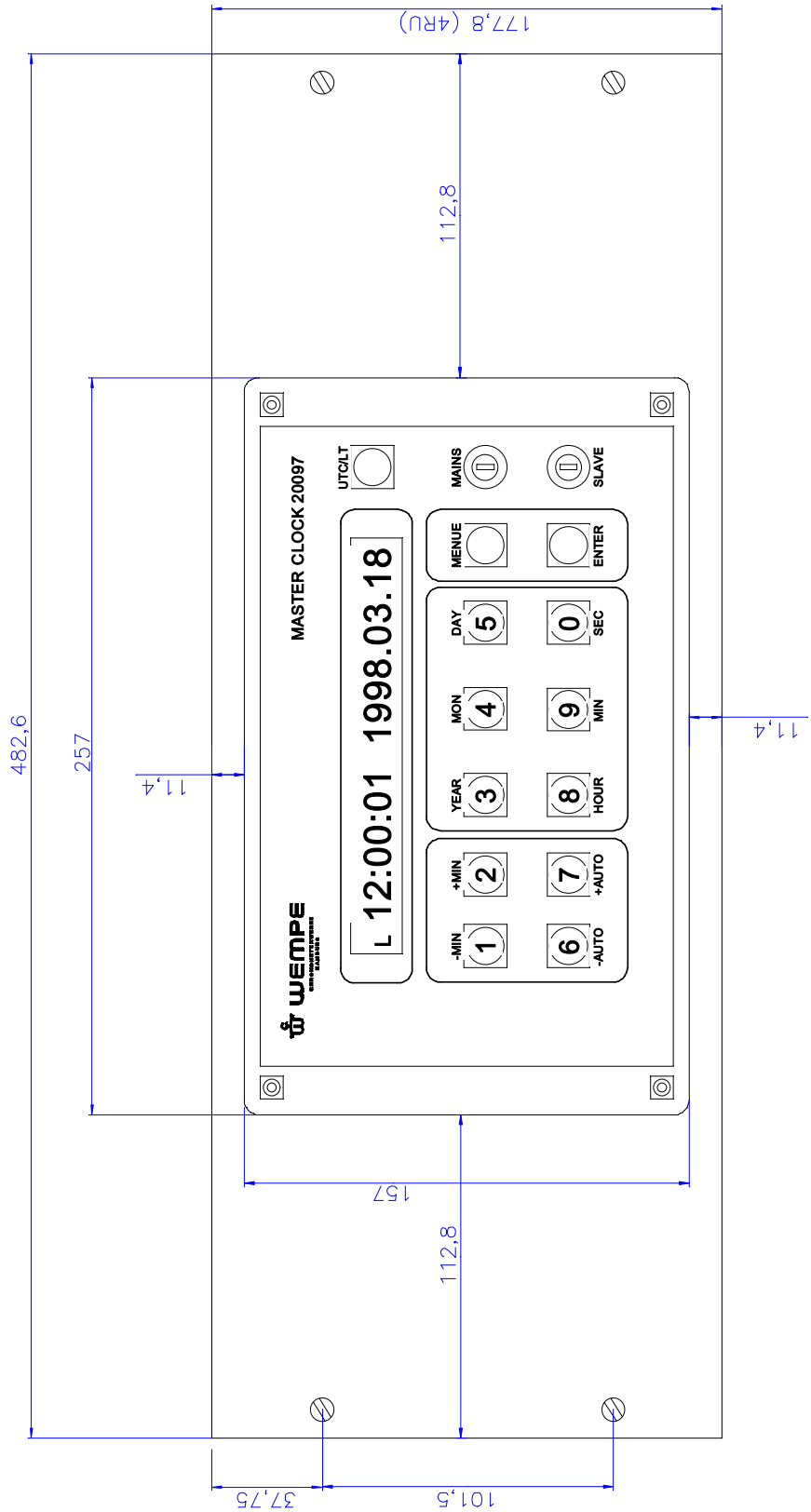

Back side view

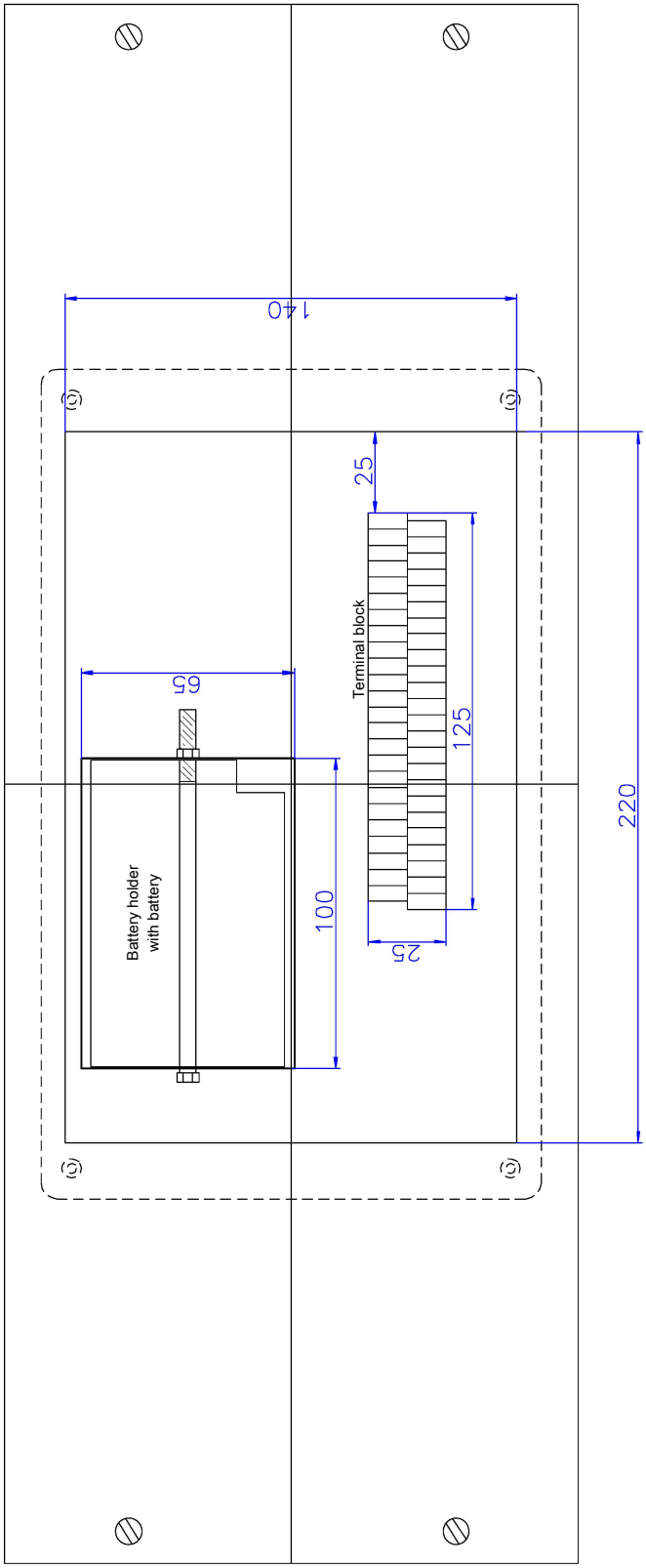

Side view

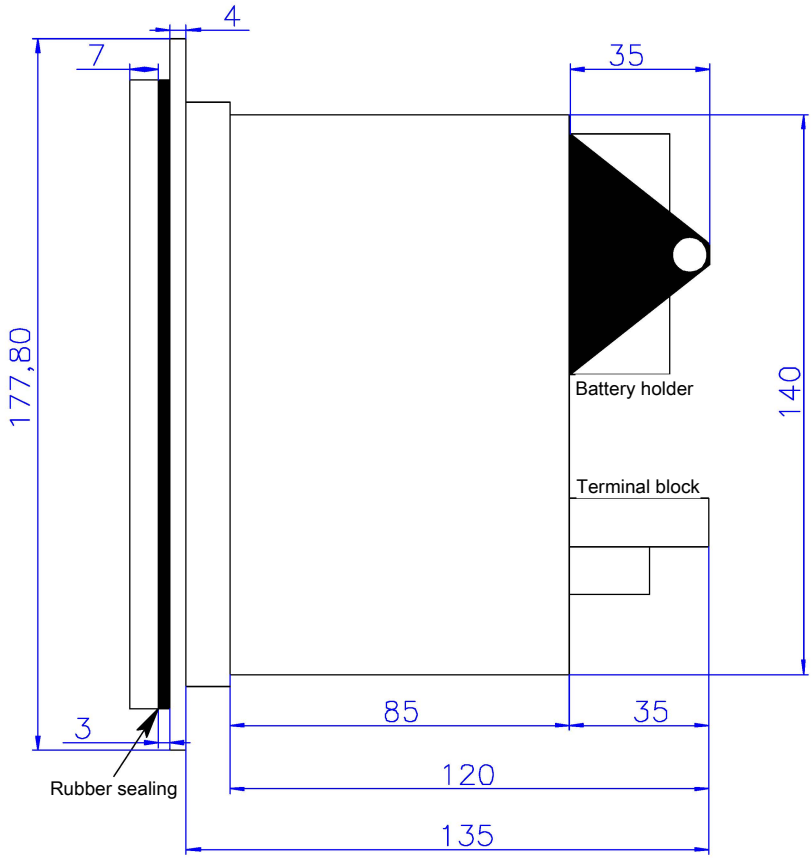
4
7
35
177,80
140
Battery holder
Terminal block
85
35
3
120
Rubber sealing
135

9.2 Terminal plans

9.2.1 Terminal plan for the standard version

Terminal

1	--- Akkumulator / accumulator + 12V	Interne Stromversorgung
2	--- Akkumulator / accumulator 0V	internal power supply

25	--- GND
3	--- GND

			Alternativ / alternative
7	--- Analogline / analogue line 2	Sekundenimpulse	*Minute rückwärts*
8	--- Analogline / analogue line 2	second impulse	*minute backwards*

			Alternativ / alternative
32	--- Analogline / analogue line 1	Minutenimpulse	*Minute vorwärts*
33	--- Analogline / analogue line 1	minute impulse	*minute forwards*

26	--- GND
27	--- GND

13	--- RS485/422 TxD+
37	--- RS485/422 TxD-
14	--- PPS+ Output
38	--- PPS- Output
39	--- GND

15	--- GPS-PPS-Pulse
40	--- GPS-PPS-GND
16	--- GPS-Data
41	--- GPS-Data-GND

The PPS impulse length should not be longer then 100ms and should be at least 200ms send before the NMEA protocol.

21	--- Relay 1 common com
45	--- Relay 1 normal open no
46	--- Relay 1 normal close no

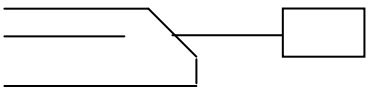

22	--- Relay 2 normal open no
23	--- Relay 2 normal close no
47	--- Relay 2 common com

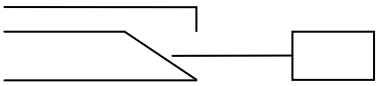

24	--- power supply + 24V DC	Stromversorgung + 24V DC
48	--- power supply 0V	Stromversorgung 0V

9.2.2 Terminal board of the extension cards

terminal **MOBALine secondary clocks – part-no. 605 998 – 2**

20	--- Local time line/UTC line depending on settings
44	--- Local time line/UTC line depending on settings
19	--- not used
43	--- not used

plug-in socket 2

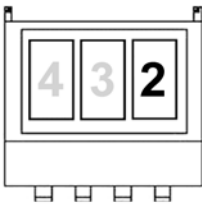

Alternatives for plug-in socket 2

terminal **Analogue-Booster – part-mo. 605 496 - 2**

19	--- Analogue-Line 2 – second impulse
20	--- Analogue-Line 2 – second impulse
43	--- Analogue-Line 1 – minute impulse
44	--- Analogue-Line 1 – minute impulse

Klemme **Analogue-Booster – part-no. 605 496 - 2**

forwards-/backwards running

SEIKO secondary clock systems

19	--- line 1	forwards
20	--- line 1	
43	--- line 2	backwards
44	--- line 2	

Digital secondary clocks – part-no. 606 198 - 0

11	--- Synchron clock
12	--- GND
35	--- Data
36	--- GND
10	--- + 24V DC
34	--- + 24V DC
9	--- 0V DC

plug-in socket 3

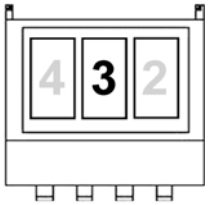

Serial interface – part-no. 605 396 - 3

28	--- GND	interface 1
29	--- interface 1 CTS	interface 1
31	---------- RS 422 +	interface 1
6	---------- RS 422 -	interface 1
4	---------- RS 232	
30	--- interface 2 CTS	interface 2
5	---------- RS 232	interface 2

plug-in socket 4

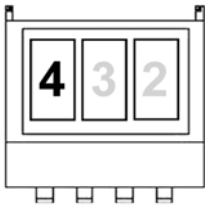

9.3 Block diagram

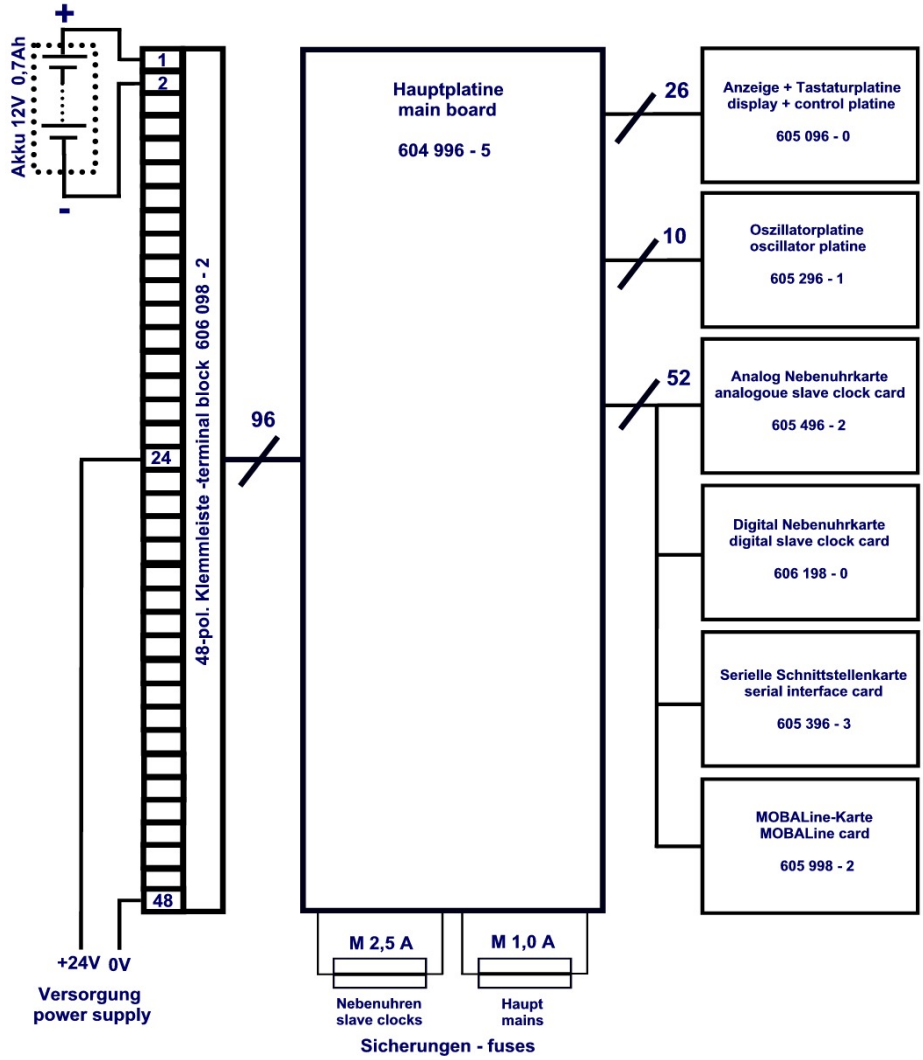

Ill. 10: Block diagram

Table of components

designation	part no.	comment
Main board	604 996 - 5	
Display + Control board	605 096 - 0	
Oscillator board	605 296 - 1	
Terminal strip board	606 098 - 2	only wall-mounting version
Terminal strip board	606 098P - 1	only console-mount. vers.
SIO Serial In-OUT board	605 396 - 3	optional
Digital secondary clock out board	606 198 - 0	optional
Analogue slave clock out board	605 496 - 2	optional
MOBALine out board	605 998 - 2	optional

9.4 Circuit boards

9.4.1 Main board

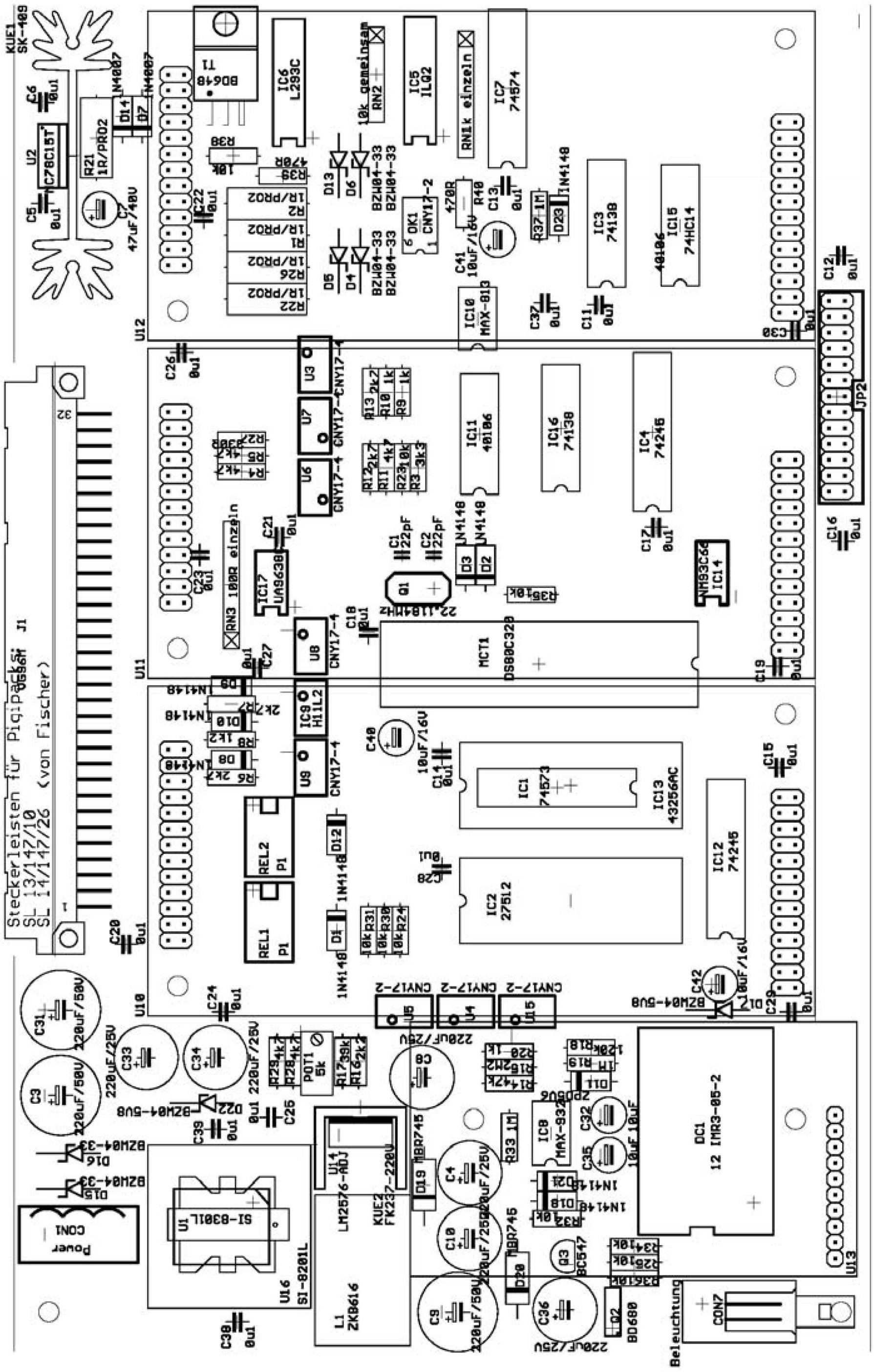

Ill. 11: Main board

9.4.2 Display and control board

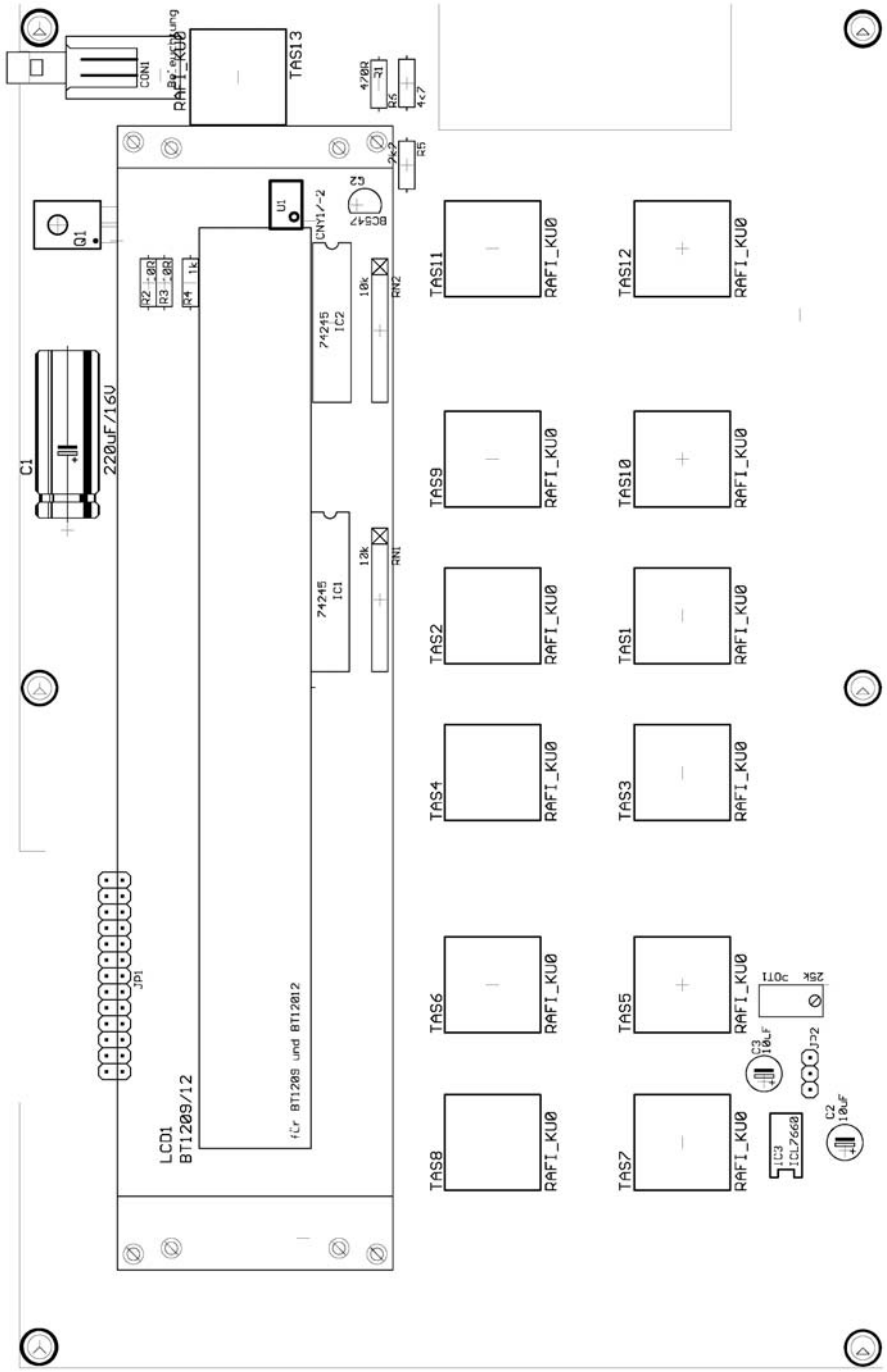

Ill. 12: Display and control board

9.4.3 Oscillator board

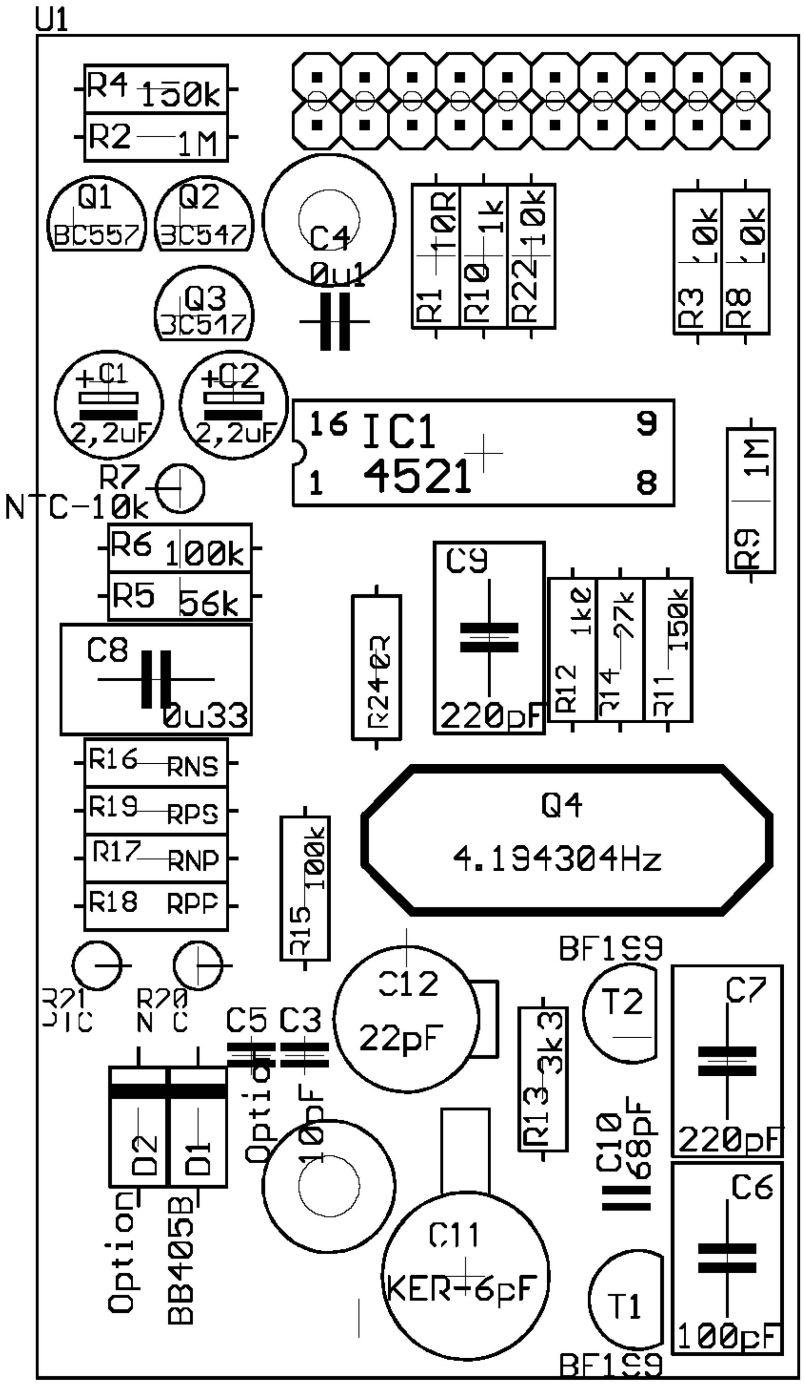

Ill. 13: Oscillator board

9.4.4 Terminal strip board (wall-mounting version)

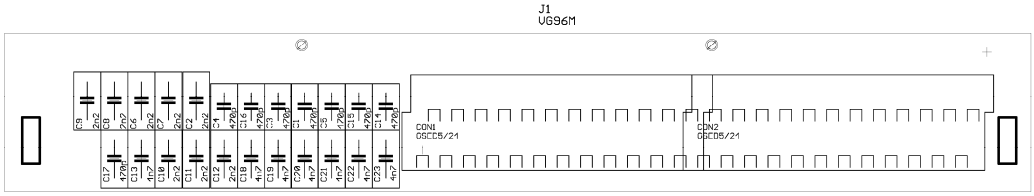

Ill. 14: Terminal strip board (wall-mounting version)

9.4.5 Terminal strip board (console-mounting version)

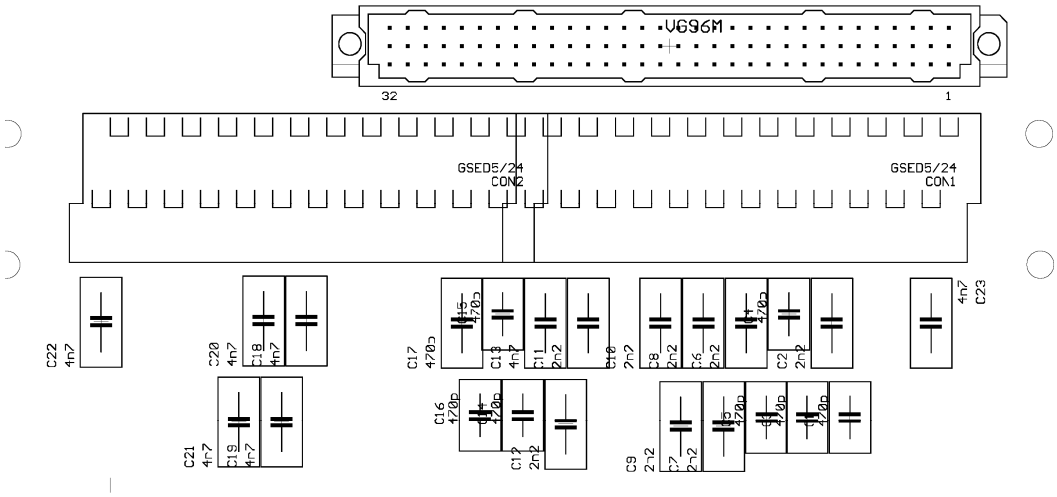

Ill. 15: Terminal strip board (console-mounting version)

9.5 Extension cards

9.5.1 SIO Serial interface in-out board (optional)

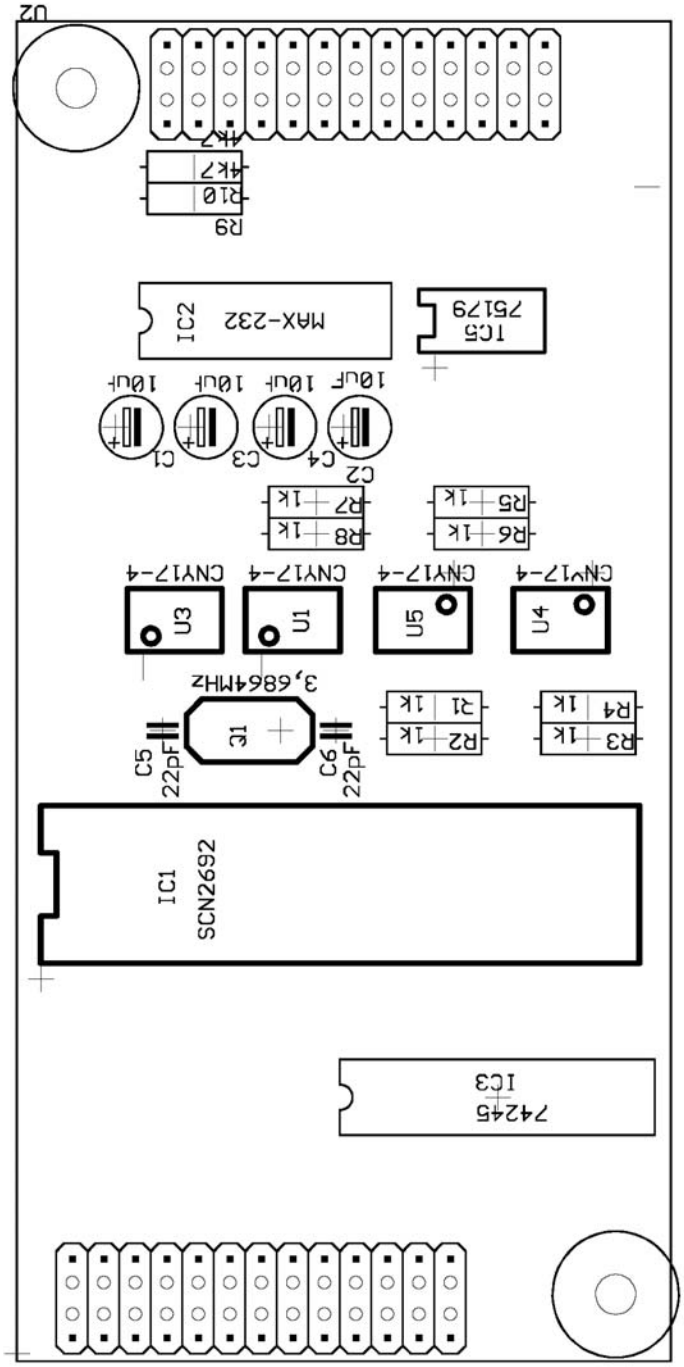

Ill. 16: SIO serial interface in-out board (optional)

9.5.2 Digital secondary clocks extension card - – out (optional)

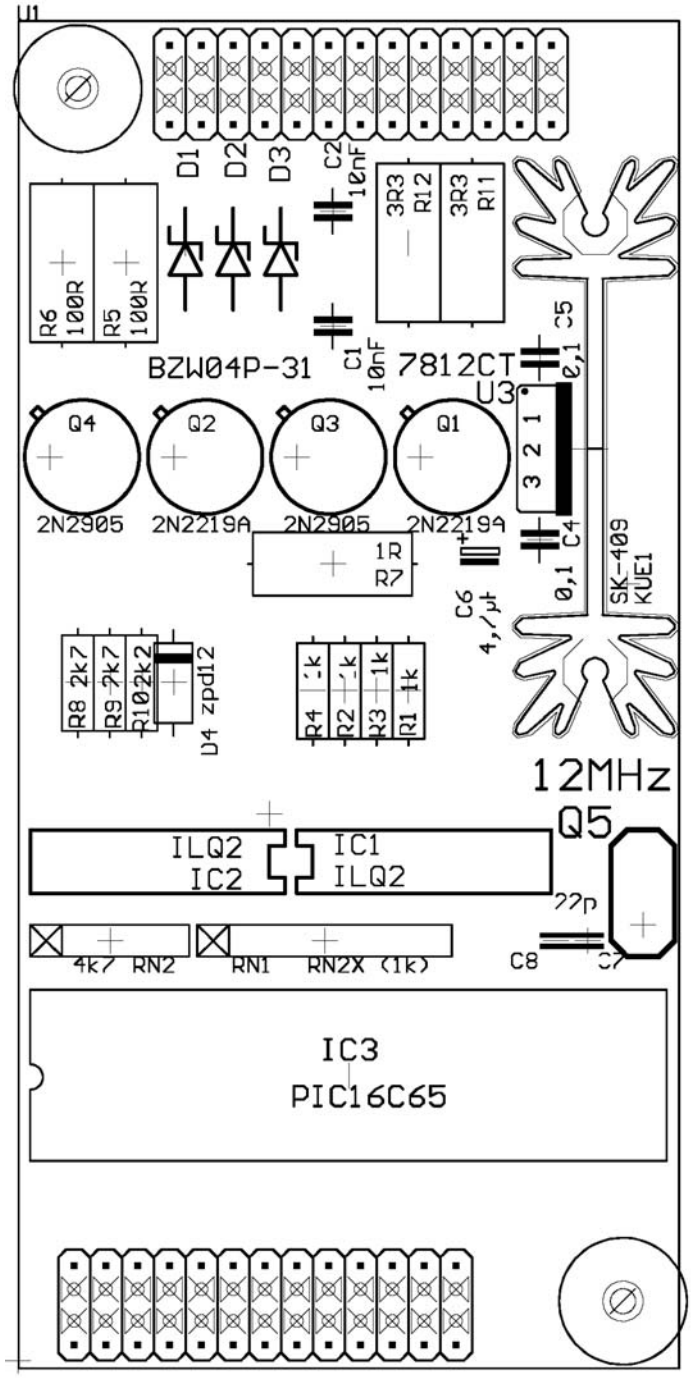

Ill. 17: Digital secondary clock out board (optional)

9.5.3 Analogue secondary clocks extension card – out (optional)

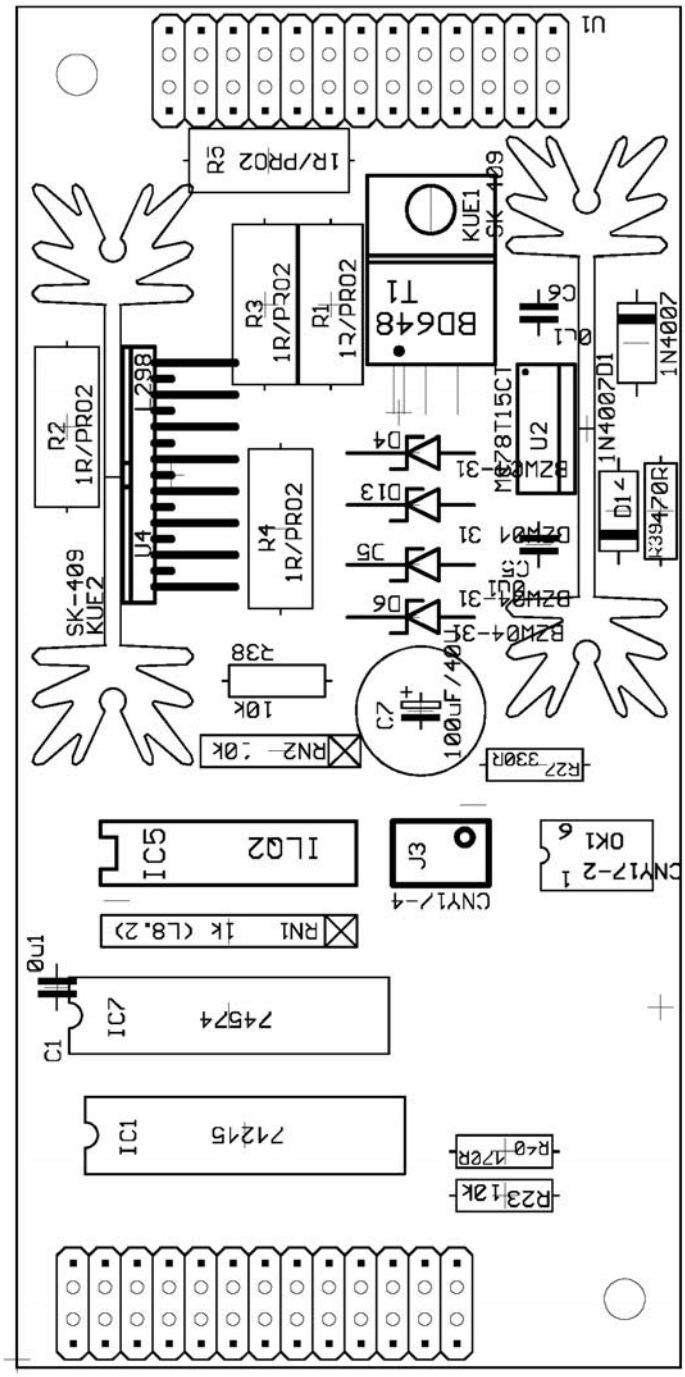

Ill. 18: Analogue slave clock out board (optional)

9.5.4 MOBALine secondary clocks extension card – out (optional)

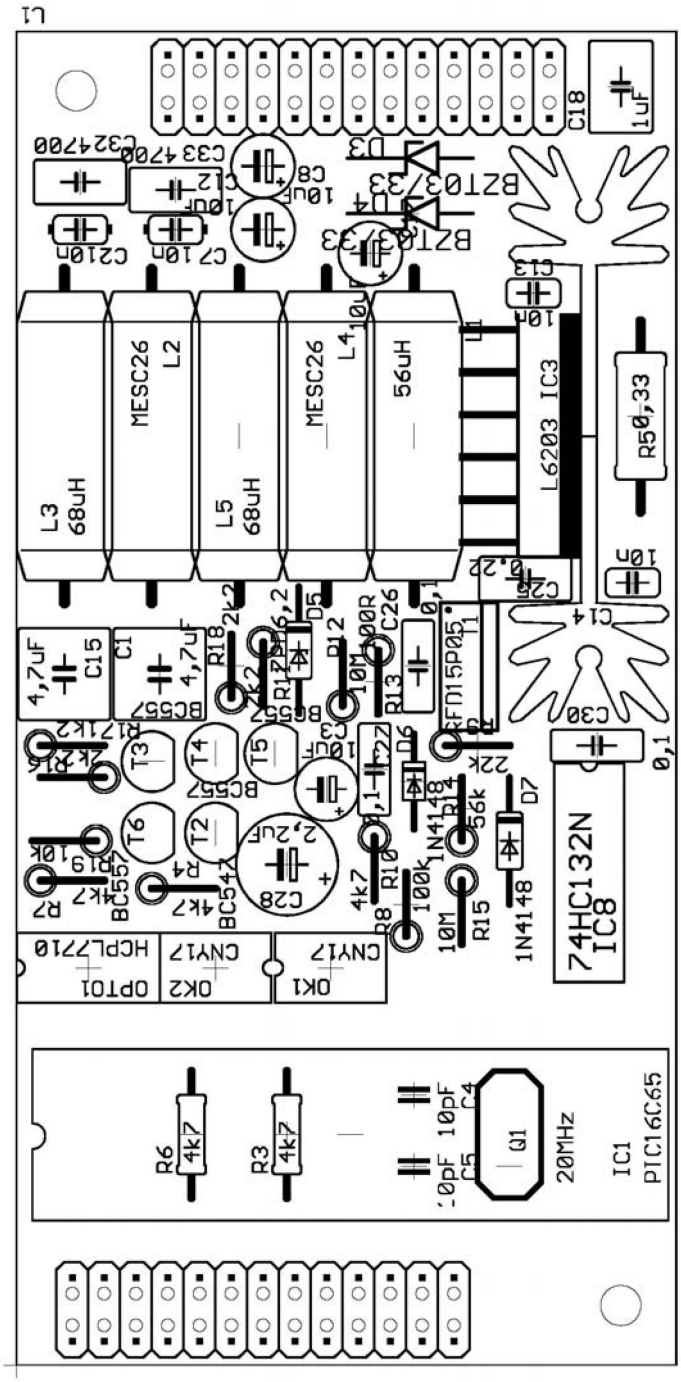

Ill. 19: MOBALine secondary clock out board (optional)

9.6 Interface protocols

9.6.1 Standard protocol main clock 20097 (terminal 13 / 37)

Data scope: 1 Start bit
8 Data bit
Parity bit (none)
2 Stop bit
4.800 Baud
transmission once a second

Byte	Mark		Description
1	STX	HEX02	Start of text
2	U	HEX55	Data transmission of the UTC-time
3	10h		Hour ten
4	1h		Hour one
5	10m		Minute ten
6	1m		Minute one
7	10s		Second ten
8	1s		Second one
9	D	HEX44	Data transmission of the UTC-date
10	10d		Day ten
11	1d		Day one
12	10m		Month ten
13	1m		Month one
14	1000y		Year thousand
15	100y		Year hundred
16	10y		Year ten
17	1y		Year one
18	L	HEX4C	Data transmission of the LT-time
19	10h		Hour ten
20	1h		Hour one
21	10m		Minute ten
22	1m		Minute one
23	10s		Second ten
24	1s		Second one
25	D	HEX44	Data transmission of the LT-date
26	10d		Day ten
27	1d		Day one
28	10m		Month ten
29	1m		Month one
30	1000y		Year thousand
31	100y		Year hundred
32	10y		Year ten
33	1y		Year one
34	LF	HEX0A	Line feed
35	CR	HEX0D	Carriage return
36	ETX	HEX03	End of text

9.6.2 Protocol ITRON Interface RS422/485

Data scope: 1 Start bit
7 Data bit
1 Parity bit (even)
2 Stop bit
4.800 Baud
transmission once a second

Byte	Mark		Description
1	STX	HEX02	Start of text
2	U	HEX55	Data transmission of the UTC-time
3	10h		Hour ten
4	1h		Hour one
5	10m		Minute ten
6	1m		Minute one
7	10s		Second ten
8	1s		Second one
9	D	HEX44	Data transmission of the UTC-date
10	10d		Day ten
11	1d		Day one
12	10m		Month ten
13	1m		Month one
14	10y		Year ten
15	1y		Year one
16	L	HEX4C	Data transmission of the LT-time
17	10h		Hour ten
18	1h		Hour one
19	10m		Minute ten
20	1m		Minute one
21	10s		Second ten
22	1s		Second one
23	D	HEX44	Data transmission of the LT-date
24	10d		Day ten
25	1d		Day one
26	10m		Month ten
27	1m		Month one
28	10y		Year ten
29	1y		Year one
30	LF	HEX0A	Line feed
31	CR	HEX0D	Carriage return
32	ETX	HEX03	End of text

9.6.3 Protocol ITRON 2000 Interface RS422/485

Data scope: 1 Start bit
7 Data bit
1 Parity bit (even)
2 Stop bit
4.800 Baud
transmission once a second

Byte	Mark		Description
1	STX	HEX02	Start of text
2	U	HEX55	Data transmission of the UTC-time
3	10h		Hour ten
4	1h		Hour one
5	10m		Minute ten
6	1m		Minute one
7	10s		Second ten
8	1s		Second one
9	D	HEX44	Data transmission of the UTC-date
10	10d		Day ten
11	1d		Day one
12	10m		Month ten
13	1m		Month one
14	1000y		Year thousand
15	100y		Year hundred
16	10y		Year ten
17	1y		Year one
18	L	HEX4C	Data transmission of the LT-time
19	10h		Hour ten
20	1h		Hour one
21	10m		Minute ten
22	1m		Minute one
23	10s		Second ten
24	1s		Second one
25	D	HEX44	Data transmission of the LT-date
26	10d		Day ten
27	1d		Day one
28	10m		Month ten
29	1m		Month one
30	1000y		Year thousand
31	100y		Year hundred
32	10y		Year ten
33	1y		Year one
34	LF	HEX0A	Line feed
35	CR	HEX0D	Carriage return
36	ETX	HEX03	End of text

9.6.4 Protocol NMEA $ZCZDA

Data scope: 1 Start bit
7 Data bit
1 Parity bit (even)
2 Stop bit
4.800 Baud
transmission once a second

Byte	Mark		Description
1	$	HEX24	
2	Z	HEX5A	
3	C	HEX43	
4	Z	HEX5A	
5	D	HEX44	
6	A	HEX41	
7	,	HEX2C	
8	10h		Hour ten
9	1h		Hour one
10	10m		Minute ten
11	1m		Minute one
12	10s		Second ten
13	1s		Second one
14	.	HEX2E	
15	1/10s		Second tenth
16	1/100s		Second hundredth
17	,	HEX2C	
18	10d		Day ten
19	1d		Day one
20	,	HEX2C	
21	10m		Month ten
22	1m		Month one
23	,	HEX2C	
24	1000y		Year thousand
25	100y		Year hundred
26	10y		Year ten
27	1y		Year one
28	,	HEX2C	
29	Dif. 10h		Difference hour ten
30	Dif. 1h		Difference hour one
31	,	HEX2C	
32	Dif. 10m		Difference minute ten
33	Dif. 1m		Difference minute one
34	*	HEX2A	
35	CS Z		numeral or 30..39
36	CS E		letter or 41..46
37	CR	HEX0D	Carriage return
38	LF	HEX0A	Line feed

9.6.5 Protocol ECHO

Data scope: 1 Start bit
7 Data bit
1 Parity bit (even)
2 Stop bit
4.800 Baud
transmission once a second

Byte	Mark		Description
1	LF	HEX0A	Line feed
2	LF	HEX0A	Line feed
3	NUL		
4	NUL		
5	NUL		
6	NUL		
7	NUL		
8	NUL		
9	NUL		
10	NUL		
11	NUL		
12	NUL		
13	G	HEX47	Data transmission of the UTC-time
14	10h		Hour ten
15	1h		Hour one
16	10m		Minute ten
17	1m		Minute one
18	10s		Second ten
19	1s		Second one
20	L	HEX4C	Data transmission of the LT-time
21	10h		Hour ten
22	1h		Hour one
23	10m		Minute ten
24	1m		Minute one
25	10s		Second ten
26	1s		Second one
27	D	HEX44	Data transmission of the UTC-date
28	10d		Day ten
29	1d		Day one
30	10m		Month ten
31	1m		Month one
32	10y		Year ten
33	1y		Year one
34	CR	HEX0D	Carriage return

9.6.6 Protocol IMA51

Data scope: 1 Start bit
7 Data bit
1 Parity bit (even)
2 Stop bit
4.800 Baud
transmission once a second

Byte	Mark		Description
1	STX	HEX02	Start of text
2	10h		Hour ten LT
3	1h		Hour one LT
4	10m		Minute ten LT
5	1m		Minute one LT
6	10s		Second ten LT
7	1s		Second one LT
8	10h		Hour ten UTC
9	1h		Hour one UTC
10	10m		Minute ten UTC
11	1m		Minute one UTC
12	10d		Day ten
13	1d		Day one
14	10m		Month ten
15	1m		Month one
16	10y		Year ten
17	1y		Year one
18	CR	HEX0D	Carriage return
19	LF	HEX0A	Line feed

9.6.7 Protocol GORGI

Data scope: 1 Start bit
7 Data bit
1 Parity bit (even)
2 Stop bit
4.800 Baud
transmission once a second

Byte	Mark		Description
1	STX	HEX02	Start of text
2	weekday		
3	weekday		
4	weekday		
5	SPACE	HEX20	
6	10d		Day ten
7	1d		Day one
8	/	HEX2F	
9	10m		Month ten
10	1m		Month one
11	/	HEX2F	
12	10y		Year ten
13	1y		Year one
14	SPACE	HEX20	
15	SPACE	HEX20	
16	10h		Hour ten
17	1h		Hour one
18	:	HEX3A	
19	10m		Minute ten
20	1m		Minute one
21	:	HEX3A	
22	10s		Second ten
23	1s		Second one
24	CR	HEX0D	Carriage return
25	NUL	HEX00	

9.6.8 Protocol MITEL

Data scope: 1 Start bit
7 Data bit
1 Parity bit (even)
2 Stop bit
4.800 Baud
transmission only if time is set up anew

Byte	Mark		Description
1	ESC	HEX1B	
2	1		
3	M		
4	A		
5	I		
6	N		
7	T		
8	1		
9	CR	HEX0D	Carriage return
10	S		
11	X		
12	2		
13	0		
14	0		
15	0		
16	CR	HEX0D	Carriage return
17	ESC	HEX1B	
18	6		
19	T		
20	I		
21	M		
22	E		
23	SPACE	HEX20	
24	10h		Hour ten LT
25	1h		Hour one LT
26	:	HEX3A	
27	10m		Minute ten LT
28	1m		Minute one LT
29	CR	HEX0D	Carriage return
30	D	HEX44	
31	E	HEX45	
32	S	HEX53	
33	K	HEX4B	
34	CR	HEX0D	Carriage return
35	ESC	HEX1B	
36	1	HEX1B	

10 Certificates

MeßTechnikNord GmbH
Akkreditierte Labore für Kalibrierung und EMV

TEST REPORT

Test: Prüfung:	EMC- Tests according DIN EN 60945
Test Report No.: Prüfberichts Nr.:	05994.084.09
Test Item: Prüfgegenstand:	MASTER CLOCK 20097
Customer: Auftraggeber:	Gerhard D. WEMPE KG Geschäftsbereich Chronometerwerke Steinstrasse 23 ♦ 20095 Hamburg

MeßTechnikNord GmbH
Akkreditierte Labore für Kalibrierung und EMV

Address:
Industriestraße 29
22880 Wedel

EMC-Centre
Accredited Testing Laboratory
Phone: (04103) 80697-10
Fax: (04103) 80697-29
Internet: www.messtechniknord.de

ilac-MRA
Deutscher Akkreditierungs Rat
DAT-PL-038/99-04
DGTech
DAT-PL-038/99-04
Eisenbahn-Bundesamt
Registrier-Nr. EBA-046/12/07

MeßTechnikNord GmbH
Akkreditierte Labore für Kalibrierung und EMV

EMC-Test
MASTER CLOCK 20097

Doc.-No. : 05994.084.09
Date : 14.05.2009

Purpose of test
Zweck der Prüfung

The **MASTER CLOCK 20097** should be tested relative to radio interference (RF-emission) and immunity from disturbances due to electromagnetic interference (susceptibility) according of the product standard **DIN EN 60945**.

Summary
Zusammenfassung

The **MASTER CLOCK 20097** is within the required EMC limits.

Tests realised see page 3.

Test levels and results and set-up particularised on page 6 to 32.

Test results relate only to item tested and described hereafter.
This report shall not be reproduced except in full without the written approval of the test laboratory.

Prepared : ..... Date: 15.05.2009.....
Hartmut Jessen (Person in charge)

MeßTechnikNord GmbH EMC CENTER

Approved : ..... Date: 15.05.2009.....
Gottfried Feyand (Head of Laboratory)

Distribution: 1 x Original MeßTechnikNord GmbH
Report via e-mail Gerhard D. WEMPE KG

EMC-Centre page 2 of 32

MeßTechnikNord GmbH
Akkreditierte Labore für Kalibrierung und EMV

EMC-Test
MASTER CLOCK 20097

Doc.-No. : 05994.084.09
Date : 14.05.2009

Tests realized

• Conducted emission at power mains 10 kHz - 30 MHz	*EMISSION*
• Radiated emission 150 kHz - 30 MHz (H-field)	*EMISSION*
• Radiated emission 30 MHz - 2 GHz (E-field)	*EMISSION*
• Immunity to electromagnetic fields 10 V/m, 80 MHz - 2 GHz	*SUSCEPTIBILITY*
• Immunity to electrostatic discharge ± 6 kV Contact discharge, ± 8 kV Air discharge	*SUSCEPTIBILITY*
• Immunity to conducted high-frequency interference 10 V_{rms}, 150 kHz- 80 MHz; power mains, signal lines	*SUSCEPTIBILITY*
• Immunity to fast transients (burst) ± 1 kV signal lines	*SUSCEPTIBILITY*
• Immunity to power deviation	*SUSCEPTIBILITY*

EMC-Centre page 3 of 32

11 Modification history

consecutive modification number	date	modified page	type of modification
00	01.07.1997		first edition
01	01.07.1999	all	revision
02	01.08.2001	15	determination of the baud rate
03	01.03.2004	all	complete revision
	01.03.2004	28-35	addition of the circuit diagram
	01.03.2004	36-43	addition of the interface protocols
04	01.04.2004	13	addition of the adjustment of impulse width
05	01.06.2004	20	addition of the adjustment of synchronisation rate
06	01.06.2004	45	addition of the programming summary
07	01.07.2005	all	complete revision by Messrs. Kothes!
08	31.01.2011	all	Software update 3.0
09	01.07.2013	37-43	addition of new dimension drawings
10	01.07.2013	63-65	addition of certificates
11	19.12.2014	55	data scope corrected – parity bit
12	01.05.2015	11, 32, 46	Further information for PPS

12 Subject index

A

Accessories 14
Accumulator 14
Accumulator replacement 35
Additional circuit boards 14
Adjustment frequency for secondary clocks 25
Adjustment of display illumination 23

B

Basic settings 22
Block diagram 39

C

Circuit boards 40
Cleaning 35
Connection of GPS receiver 20
Connection of secondary clocks 20
Console mounting 18

D

Design and function 12
Display illumination on/off 23
Disposal 8

E

Electrical connection 19
Explanation of the symbols 6
Extension cards 14, 28, 44

F

Fitting of cables 18
Front panel 12
Front view 12
Fuses 15

G

Guarantee 7

I

Insert GPS receiver 30
Installation 16, 17
Installation and operating staff 10
Intended use 9
Interface protocols 48
Interfaces 11

L

Liability 7
Lock the keyboard 24

M

Maintenance 35

O

Operation 22
Operator’s responsibility 10
Oscillator 11
Oscillator, readjustment 36

P

Packaging 8
Power reserve 11
Power supply 11
Programming of relay outputs 27
Programming summary 33
Putting into operation 21

Q

Qualified staff 10

R

Remove write protection 24
Requirements on the place of installation 16

S

Safety 9
Select indicated time 22
Service addresses 34
Setting of analogue lines 25
Setting of automatic time adjustment 23
Setting of date 23
Setting of impulse width 25
Setting of time 22
Storage 8
System overview 13

T

Technical Data 11
Terminal plans 37
Trained staff 10
Transport 7
Trouble shooting 34

U

Unlock the keyboard 22
Use of extension cards 28

W

Wall mounting 17

Notice

Maritime precision at its best!

WEMPE

CHRONOMETERWERKE
HAMBURG

Gerhard D. Wempe KG
Division Chronometerwerke
Steinstr. 23 20095 Hamburg Germany

P: +49 (0) 40 / 33 44 8 – 899 F: +49 (0) 40 / 33 44 8 - 676
E: chrono@wempe.de I: www.chronometerwerke-maritim.de