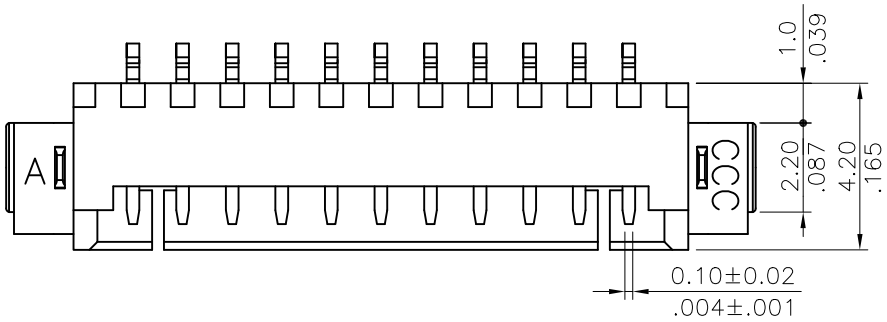

Notes :

* Insulation: Nylon 6T UL 94V-0, Color Nature
* Contact : Phosphor Bronze
* Fixed Tab : Brass with Matte Tin Plated
* Recommended mating part:
  Housing: CI44**S0000-L
  Terminal: CI44T011PP0
* For Lead-Free IR Reflow process

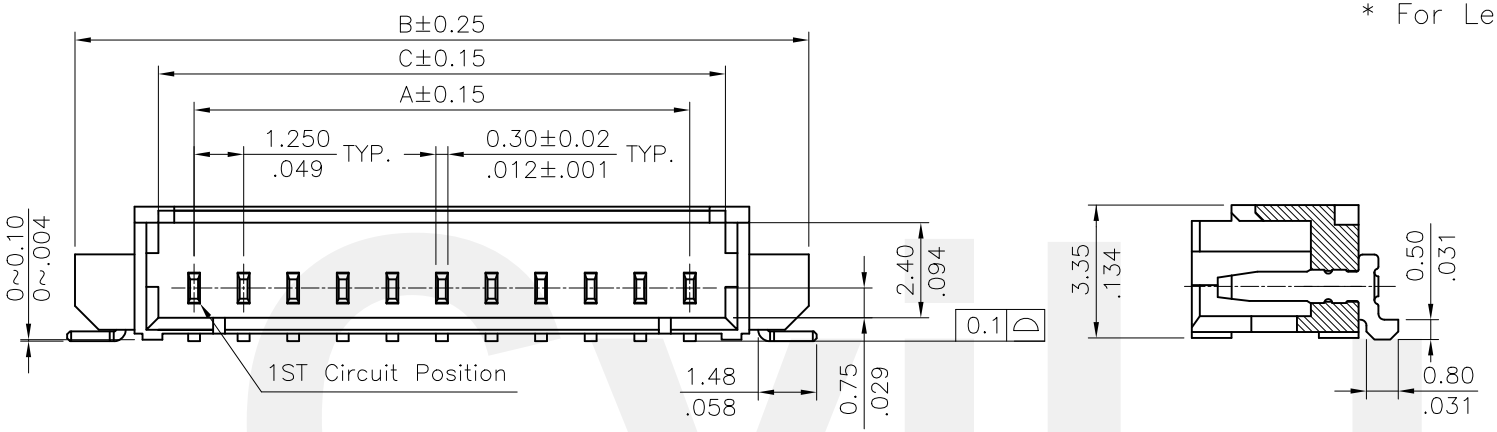

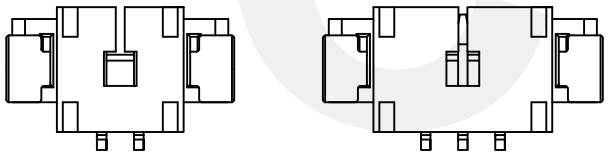

FOR 2 Circuits

FOR 3 Circuits

A = 1.25 x No. of Spaces
B = A + 6.1
C = A + 1.9

* Available in 2 through 15 circuits

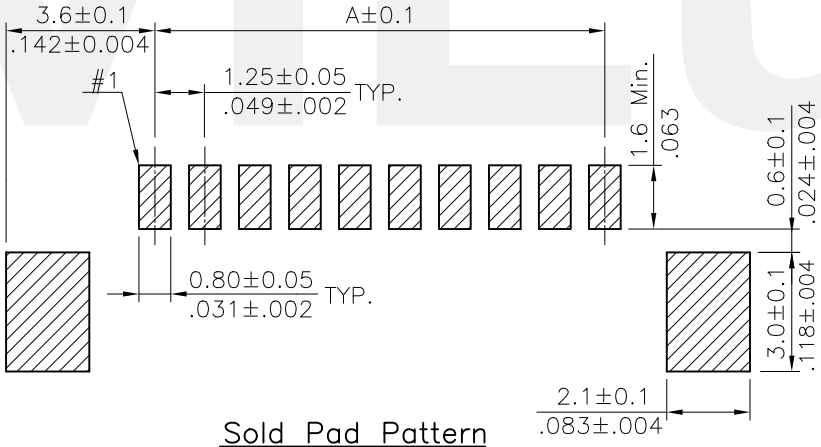

Sold Pad Pattern

ORDERING CODE:

CI44	**	M	*	H	**	-NH
①	②	③	④	⑤	⑥	⑦

① Series No.:
② No. of circuits: 02 TO 15
③ Contacts type: M= SMT
④ Plating option:
  1= Matte Tin Plated over Nickel
  2= Gold flash plated over Nickel
⑤ Tail style: H= Right angle
⑥ Option: 00= Standard(Tube packing)
  R0= Tape & Reel packing
⑦ Other option:
  -NH=For Lead Free IR Processes and Halogen-Free

Halogen-Free

Lead Free Process

RoHS Compliant

SYM	NAME	DATE	REVISIONS
4	Karen	12/09-14'	ECNT114252/ECRT114090
3	Ellie	9/24-14'	ECNT114210
2	Enya	7/26-12'	ECN12176-0 /ECR12061-1
1	Karen	4/19-11'	ECN11071/ECR11010-1

CVILUX CORP 2015.01.16 ISSUED

		DATE
DRAWN BY:	Karen	12/25-14'
ENGINEER:	Sun	12/26-14'
CHECKED BY:	Eisley	12/29-14'
APPROVED BY:	Eisley	12/29-14'

UNIT: mm / inch

TOLERANCE UNLESS OTHERWISE SPECIFIED

.X ± 0.25/.010	X.° ± 1°
.XX ± 0.15/.006	.X° ±
.XXX ± 0.08/.003	.XX° ±

TITLE: 1.25MM(.049") RIGHT ANGLE SMT TYPE HEADER

MATERIAL:

FINISH:

瀚荃股份有限公司
CviLux Corporation

DRAWING NO.	CI4447SE	PART NO.	CI44**M*H**-NH
SCALE	5 / 1	SHEET 1 OF 2	

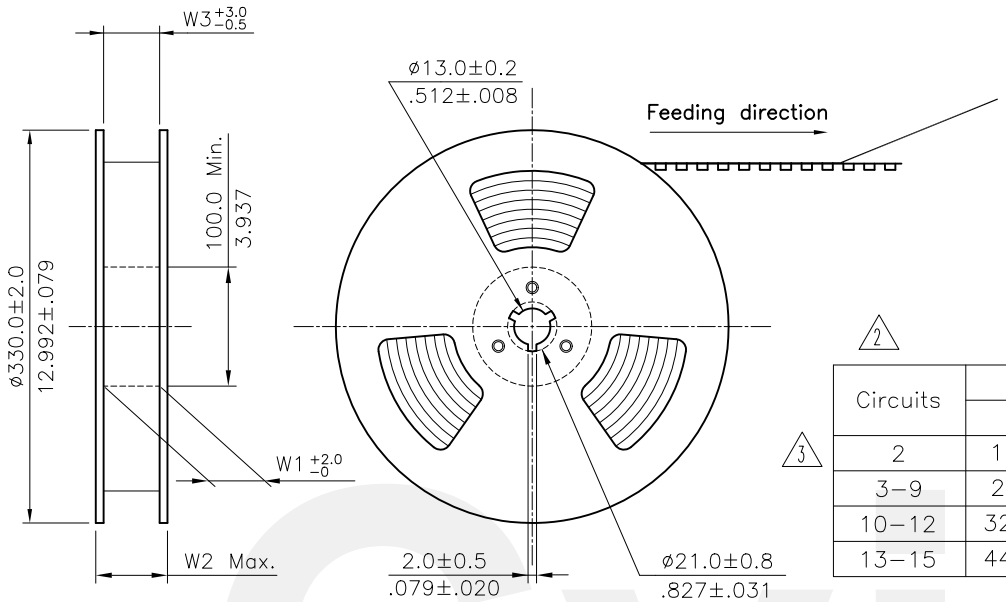

NOTE :

1. * Reel Material : CORRUGATED PAPER
   * Carrier Material : Clear, Conductive Polystyrene Alloy
   * Cover Tape Material : Polyester
   * Cover Tape Peel Strength : 0.1N – 1.3N
   * Carrier camber is within 1mm in 100mm
   * All dimensions meet EIA–481–2 & EIA–481–3 requirements.
   * Quantity : 1400 PCS/Reel

2

3

Circuits	Dimension					Packing (Reel/Caton)
	E	F	W1	W2	W3	
2	16.0(.630)	---	16.5(.650)	22.5(.886)	16.5(.650)	11
3–9	24.0(.945)	---	24.5(.965)	30.5(1.201)	24.5(.965)	9
10–12	32.0(1.260)	28.40(1.118)	32.5(1.280)	38.5(1.516)	32.5(1.280)	7
13–15	44.0(1.732)	40.40(1.591)	44.5(1.752)	50.5(1.988)	44.5(1.752)	5

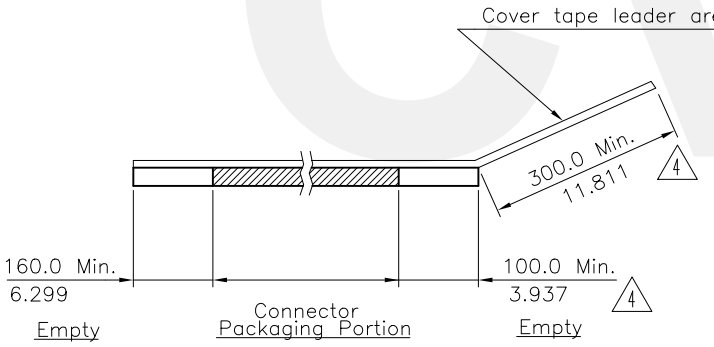

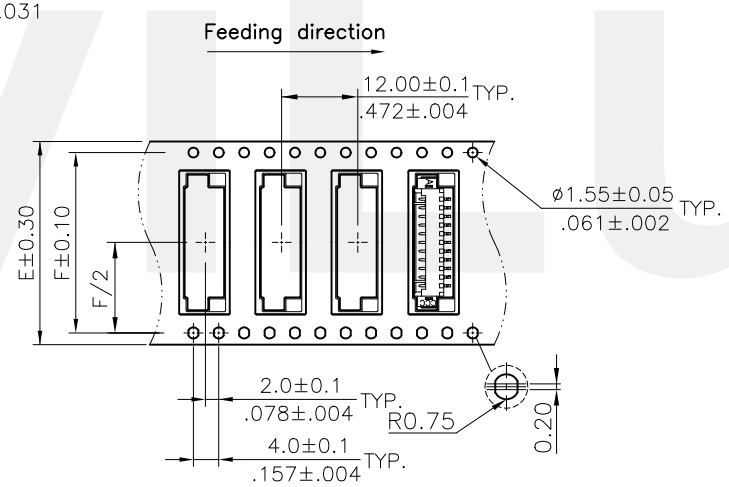

WIDTH : 32,44 mm Carrier

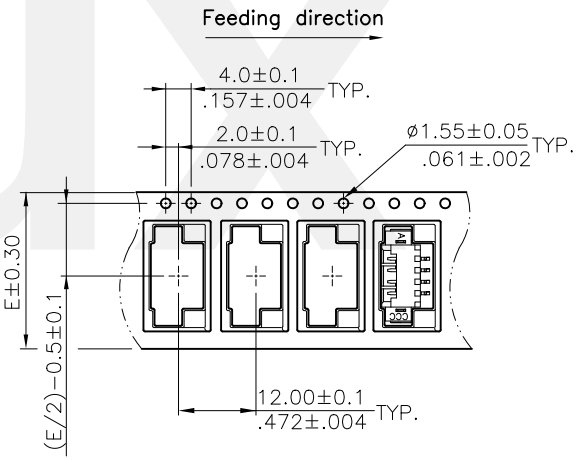

WIDTH : 16,24 mm Carrier

RoHS Compliant

SYM	NAME	DATE	REVISIONS
4	Karen	12/09-14'	ECNT114252/ECRT114090
3	Ellie	9/24-14'	ECNT114210
2	Enya	7/26-12'	ECN12176-0 /ECR12061-1
1	Karen	4/19-11'	ECN11071/ECR11010-1

CVILUX CORP 2015.01.16 ISSUED

		DATE
DRAWN BY:	Karen	12/25-14'
ENGINEER:	Sun	12/26-14'
CHECKED BY:	Eisley	12/29-14'
APPROVED BY:	Eisley	12/29-14'

UNIT: mm / inch

TOLERANCE UNLESS OTHERWISE SPECIFIED

.X ±	X.° ± 1°
.XX ±	.X° ±
.XXX ±	.XX° ±

TITLE: 1.25MM(.049") RIGHT ANGLE SMT TYPE HEADER

MATERIAL:

FINISH:

瀚荃股份有限公司
CviLux Corporation

DRAWING NO.	CI4447SE	PART NO.	CI44**M*H**–NH
SCALE		SHEET 2 OF 2	