modis

Data Sheet Air Cooler

Cooling Water Cooler

RGE440-AH920

Project	MIDI
Project-No.	1800621000043
Customer	IDOSB
Document-No.	AS.5001.432.440.0000
Location	Tuzla, Turkey
P&ID-No.	5001.956.440.0000

Approval

Modis GmbH		
Prepared (Date/Dep./Sign.)	Checked (Date/Dep./Sign.)	Approved (Date/Dep./Sign.)
03.12.18/CoC Plant Engineering/TR	30.01.19/CoC Plant Engineering/EG	
Customer		
Checked (Date/Dep./Sign.)	Approved (Date/Dep./Sign.)	

History of change

Revision	Creator	Date	Description of Change
0	TR	03.12.2018	First Issue
0A	EG	30.01.2019	Adjusted Power
0B	RG	25.02.2019	acc.to offer

modis

Tag-No.	RGE440-AH920	Data Sheet Air Cooler		Customer	IDOSB
				Project	MIDI
		Description	Cooling Water Cooler	Project-No.	1800621000043
				Location	Tuzla, Turkey
Revision	0	Doc.-No.	**AS.5001.432.440.0000**	P&ID-Number	5001.956.440.0000

1	**General**										
2											Rev.
3	Number of Equipment		1								0A
4	Operation mode			in series			parallel				0A
5	Location			indoor		X	outdoor				0A
6	Manufacturer		Güntner				Type	GFDC WP 080.1/13-53			0B
7	Design according API 661/ISO 13706										
8	**Design Code**										
9	X 2014/68/EU						ASME VIII				Rev.
10											0A
11	Fluid group		1	X 2			Division		1	2	
12											
13	Category		I	II	III	IV	Lethal service		yes	no	
14											
15	Modul		G	H	H1		Special service		no	sour gas	
16											
17	X AD 2000								other		
18											
19	**Operating conditions**										
20				Tube side				Heating coil			Rev.
21	Medium		in	Water	out						0A
22	Service description										
23	Corrosion / Erosion by										
24	H2 [% vol] / H2S [ppm] / Chloride										
25	Total acid number	TAN									
26	Partial pressure H2 / H2S	bar a									
27	Mass flow										
28	Total	kg/h				8608,3					
29	Liquid	kg/h	in	8608,3	out		in		out		0A
30	Vapor	kg/h	in		out		in		out		
31	Water / Steam	kg/h	in		out		in		out		
32	Operating temperature										
33	T, normal	°C	in	50	out	30	in		out		0A
34	T, maximum	°C	in	55	out	35	in		out		0A
35	T, minimum	°C	in	35	out	25	in		out		0A
36	Operating pressure										
37	p, normal	bar g	in	3	out	~2,8	in		out		0A
38	p, maximum	bar g	in		out		in		out		
39	p, minimum	bar g	in		out		in		out		
40	Others										
41	Velocity	m/s									
42	Pressure drop (max. allow.)	bar				0,5					0A
43	Liquid										
44	Density at 15°C, 1 bar	kg/m³	in	999,2	out		in		out		0A
45	Density, normal	kg/m³	in	991,89	out		in		out		0A
46	Viscosity, normal	mPa*s	in	0,66	out		in		out		0A
47	Specific heat	kJ/(kg*K)	in	4,182	out		in		out		0A
48	Thermal conductivity	W/(m*K)	in	0,63	out		in		out		0A
49	Enthalpy	kJ/kg	in		out		in		out		
50	Solidification point	°C				0					0A
51	Boiling point at p, normal	°C				143,6					0A
52	Vapor										
53	Molecular weight	kg/kmol	in		out		in		out		
54	Density, normal	kg/m³	in		out		in		out		
55	Viscosity, normal	mPa*s	in		out		in		out		
56	Specific heat	kJ/(kg*K)	in		out		in		out		

modis

Tag-No.	RGE440-AH920	Data Sheet Air Cooler		Customer	IDOSB
				Project	MIDI
		Description	Cooling Water Cooler	Project-No.	1800621000043
				Location	Tuzla, Turkey
Revision	0	Doc.-No.	**AS.5001.432.440.0000**	P&ID-Number	5001.956.440.0000

1	**Operating conditions (continued)**										
2				Hot side				Heating coil			Rev.
3	Thermal conductivity	W/(m*K)	in		out		in		out		
4	Enthalpy	kJ/kg	in		out		in		out		
5	Dew point at p, normal	°C									
6											
7	Others										
8	Latent heat	kJ/kg	in		out		in		out		
9	Fouling coefficient	m²K/W	in	0,0003	out		in		out		0A
10											
11				Air side							
12	Air inlet temp. (design dry bulb)	°C	35 1)								0A
13	Air flow rate/item	m³/s									
14	Mass velocity (net free area)	kg/s*m²									
15	Air outlet temperature	°C									
16	Air flowrate/fan	m³/s									
17	Face velocity	m/s									
18	Min. design ambient temperature	°C									
19	Altitude	m									
20	Static pressure	kPa									
21											
22	Heat transferred	kW	200		Heat transfer surface finned tube			m²			0A
23	Heat transfer coefficient finned	W/(m²*K)	34,54		Heat transfer surface bare tube			m²			0B
24	Heat transfer coef. bare tube service	W/(m²*K)									
25											
26	**Construction Data**										
27											Rev.
28	**Tube bundle**										
29	Size (W*L)	m									
30	No./bay										
31	No. of tube rows										
32	Bundles in parallel				Bundles in series						
33	Structure mounting		Grade			Pipe rack			Other		
34	Pipe-rack beams (distance C-C)										
35	Ladders, walkways, platforms		yes			no					
36	Structure surf. prep./coating										
37	Header surf. prep./coating										
38											
39	**Louvre**										
40	Action control		Auto			Manual					
41	Action type		Opposed			Parallel					
42											
43	**Heating coil**			Rev.							
44	No. of tubes					Fin type					
45	Outer diameter OD	mm				Thickness					
46											
47	**Header**			Rev.							
48	Type					Slope		mm/m			
49	Corrosion allowance	mm	1	0A		Chemical Cleaning					
50	No. of passes					Minimum wall thickness		mm			
51											
52	**Tube**			Rev.							
53	Outer diameter OD	mm				Length		mm			
54	Minimum wall thickness	mm				Pitch		mm			
55	No./bundle					Layout					
56	**Remarks see next page**										

modis

Tag-No.	RGE440-AH920	Data Sheet Air Cooler		Customer	IDOSB
				Project	MIDI
		Description	Cooling Water Cooler	Project-No.	1800621000043
				Location	Tuzla, Turkey
Revision	0	Doc.-No.	**AS.5001.432.440.0000**	P&ID-Number	5001.956.440.0000

Construction Data (continued)

											Rev.
	Fin				Rev.						
	Type					Outer diameter OD		mm			
	Stock thickness	mm				No./m					
	Selection temperature	°C									

Design Conditions

				Hot side				Heating coil			Rev.
	Max. allowable pressure	bar g	min	-0,5	max	10	min		max		0A
	Max. allowable temperature	°C	min	0	max	80	min		max		0A
	Test pressure	bar g	acc. Code								0A
	Corrosion allowance	mm	1								0A
	Weld efficiency factor										0A
	Wind loads	zone 4	acc. to AD2000 Merkblatt S3, DIN EN 1993-3-2 resp. DIN 1055-2								0A
	Earthquake zone	zone 3	acc. to DIN 4149 for site								0A
	Other loads										

Mechanical Equipment

	Fan			Rev.					Rev.
	Manufacturer & Model	VT03153U		0B	Diameter	m			
	No./bay				No. of blades				
	Speed	r/min	925/760	0B	Angle				
	Pitch adjustment		Manual		Auto				
	kW/fan @design temperature				Max. allow. tip speed	m/s			
	kW/fan @min. ambient temp.				Calculated tip speed	m/s			
	Driver								
	Type	electric		0A	Enclosure				
	Manufacturer & Model				Current	V	400		0A
	No./bay				Phase		3		0A
	Driver	kW	3,9	0B	Cycle				
	Speed	r/min	925/760	0B	Fan noise level	db(A)	<84		0B
	Service Factor				allowed/calculated	@m			
	Speed reducer								
	Type				Service factor				
	Manufacturer & Model				Speed ratio	/1			
	No./bay				Enclosure				
	Support		Structure		Pedestal				
	Vibration switch		yes		no				

Controls air-side

									Rev.
	Air circulation		None		Internal		External		
	Over:		Side		End				
	Degree control of outlet process temp. (max cooling)				°C	+		-	
	Action on control signal failure								
	Fan pitch:		Minimum		Maximum		Lockup		
	Louvres:		Open		Close		Lockup		
	Actuator air supply								
	Fan:		None	X	Positioner		Bias relay		0A

	Remarks	Rev.
	1) max air temp is 45,5 °C at peaks	

modis

Tag-No.	RGE440-AH920	Data Sheet Air Cooler		Customer	IDOSB
				Project	MIDI
		Description	Cooling Water Cooler	Project-No.	1800621000043
				Location	Tuzla, Turkey
Revision	0	Doc.-No.	**AS.5001.432.440.0000**	P&ID-Number	5001.956.440.0000

Controls air-side (continued)

Rev.

Louvres:		Inlet		Outlet		Bypass				
Positioner		Yes		No						
Signal air pressure				kPa	min		max			
Signal air pressure				kPa	min		max			

Geometric data

Rev.

Dimensions (without insulation)	mm	Length		Width		Height			
Weight	kg		empty	kg		operating			
	kg		water filled	kg		emergency			

Material

		Rev.				Rev.
Tube bundle	CS	0A	Nozzles	hot side	heating coil	
Fins			Pipes	CS		0A
Heating coil tube			Flanges	CS		0A
Heating coil fins			Bolts / Nuts			
Header	CS	0A	Entrance lining			
Header plug			Blind flanges			
Fan blades			Gaskets			
Fan Hub			Supports			
Louvre			Insulation			

X Additional water cooling 0A

Rev.

Mass flow	kg/h	in	acc. Design	out		0A
Operating temperature						
T, normal	°C	in	20	out		0A
T, maximum	°C	in		out		
T, minimum	°C	in		out		
Operating pressure						
p, normal	bar g	in	3	out		0A
p, maximum	bar g	in		out		
p, minimum	bar g	in		out		

Rev.

modis

Tag-No.	RGE440-AH920	Data Sheet Air Cooler		Customer	IDOSB
				Project	MIDI
		Description	Cooling Water Cooler	Project-No.	1800621000043
				Location	Tuzla, Turkey
Revision	0	Doc.-No.	**AS.5001.432.440.0000**	P&ID-Number	5001.956.440.0000

1	**Surface preparation / Corrosion protection**									
2										Rev.
3		X	1st layer	adhesive agent		Thickness	acc. Suppli	µm		0A
4	Carbon steel	X	2nd layer	adhesive agent		Thickness	acc. Suppli	µm		0A
5			3rd layer	adhesive agent		Thickness		µm		
6		SS parts pickling / passivating								
7		Derusting / Blasting / Priming								
8		Hot dip galvanizing acc. DIN EN ISO 10684				Bolts / Nuts				
9		Enameling acc. to DIN EN ISO 28721-1								
10		Cladding DIN EN 1011-5, DIN EN ISO 9692-4 for								
11		Grinding / polishing	µm		inside, roughness Rmax					
12			µm		outside, roughness Rmax					
13		Organic coatings and lining		DIN EN 14879-1		DIN EN 14879-2		DIN EN 14879-4		
14		2- Components layer (2 x t = 0,08 mm)								
15										
16	**Manufacturing Code**									
17										
18	Reinforcement plates are to be fully welded.									
19	Vent holes must be closed with permanently elastic material									
20										
21	**Testing**									
22										Rev.
23	Pressure test	X	according to PED							0A
24	PED acceptance	x	by certified body, chosen by vendor							0B
25	Certificate of conformity	X	by certified body, chosen by vendor							0A
26	Inspection of manufacturer		according manufacturing schedule							
27			Pressurized air		Pressure	bar g		Leakage	mbar*l/s	
28			DIN EN 1593							
29	Gas tight test		Helium DIN EN 13185		Pressure	bar g		Leakage	mbar*l/s	
30										
31			TA-Luft conformity acc. DIN 28090, DINV ENV-1591							
32										
33	**Additional Testing**									
34										Rev.
35		X-Ray test	DIN EN ISO 17636	for parts						
36		Ultrasonic test	DIN EN ISO 17640	for parts						
37		Colour intrusion test	DIN EN ISO 3452	for parts						
38		Surface Rmax testing	DIN EN ISO 4287	for parts						
39		Strength test	DIN EN ISO 9015-1	for parts						
40		Enamel test	DIN EN ISO 28721-1	for parts						
41		Testing organic coating	EN 14879-2/ -4	for parts						
42										
43	**Material documentation**									
44										Rev.
45	Parts with medium contact		general		Certificate	3.1	Certificate acc. to DIN EN 10204			0A
46	Parts without medium contact		general		Certificate	2.2	Certificate acc. to DIN EN 10204			0A
47	Molds (bend, Tee, Reducer; Caps) according to DIN EN 10253-2 and 10253-4 with 3.1 certificate									
48	Molds		with tempering certificate							
49										
50	**Remarks**									Rev.
51										
52										
53										
54										
55										
56										

modis

Tag-No.	RGE440-AH920	Data Sheet Air Cooler		Customer	IDOSB
				Project	MIDI
		Description	Cooling Water Cooler	Project-No.	1800621000043
				Location	Tuzla, Turkey
Revision	0	Doc.-No.	**AS.5001.432.440.0000**	P&ID-Number	5001.956.440.0000

Nozzle table

Designation No.	DN/NPS	PN / Rating	Length [mm]	Flange type acc. to DIN EN 1092-1 / ANSI	Nozzle acc. to DIN/ANSI	Gasketing acc. to DIN EN 1092-1	Service	Rev.
N1	50	10					Header Inlet	0A
N2	50	10					Header Outlet	0A
N3	25	10					Header Vent	0A
N4	25	10					Header Drain	0A
N5	25	10					Header TI	1A
N6	25	10					Header PI	1A

Nozzles shall be calculated with loads from the following table, the real nozzle loads will be given later. The nozzle loads shall be shown on manufactures drawing with sketch and table

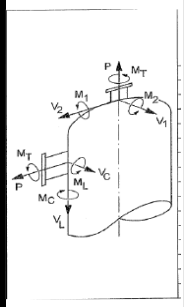

Nozzle loads for Equipment nozzles acc. to AD2000

DN	N			Nm		
	P	VL	VC	ML	MC	MT
		V1	V2	M1	M2	
50	2300	3100	2300	500	400	800
80	3500	4100	3000	1400	900	1800
100	4300	4800	3500	2100	1400	2600
150	6700	6800	4800	4000	2600	4800
200	9500	9300	6300	6400	4200	7200
250	12600	12200	8000	9100	6100	10200
300	16200	15500	9800	12200	8300	13400
350	20100	19300	11900	15700	10900	16900
400	24300	23400	14000	19600	13800	20900
450	29000	28000	16400	23900	17000	25200
500	34000	33000	18900	28500	20500	29800
600	45200	44300	24500	39000	28600	40100
700	47900	57200	30700	51000	38000	51800
800	72100	71800	37600	64600	48700	65000
900	87700	88100	45200	79700	60600	79600
1000	1E+05	106100	53500	93600	73900	95500

Nozzle loads for Equipment nozzles acc. to ASME

DN	N			Nm		
Inch	P	VL	VC	ML	MC	MT
		V1	V2	M1	M2	
2	517	697	517	369	295	590
3	787	922	674	1032	664	1328
4	967	1079	787	1549	1033	1918
6	1506	1529	1079	2950	1918	3540
8	2136	2091	1416	4720	3098	5384
10	2833	2743	1798	6712	4499	7523
12	3642	3485	2203	8998	6122	9883
14	4519	4339	2675	11580	8039	12465
16	5463	5261	3147	14456	10178	15415
18	6519	6295	3687	17628	12539	1857
20	7644	7419	4249	21020	15120	21979
24	10161	9959	5508	28765	21094	29576
28	13016	12859	6902	37616	28027	38206
32	16209	16141	8453	47646	35919	47941
36	19716	19806	10161	58784	44696	58710
40	23582	23852	12027	71027	54506	70437

Remarks	Rev.

modis

Tag-No.	RGE440-AH920	Data Sheet Air Cooler		Customer	IDOSB
				Project	MIDI
		Description	Cooling Water Cooler	Project-No.	1800621000043
				Location	Tuzla, Turkey
Revision	0	Doc.-No.	**AS.5001.432.440.0000**	P&ID-Number	5001.956.440.0000

1	**Documentation**							
2	**Documents**			included				Rev.
3	Drawings		-times, 4 weeks after order, true to scale and as PDF-File					
4	Strength calculations		-times, 4 weeks after order			includes proof of stability		
5	Welding documentation		-times, 4 weeks after order			fabrication timetable		
6	All documents with TAG-No., type of equipment and project number							
7	On main drawing (title block) must be shown: TAG-No., nominal size, nominal pressure and material. In title block of							
8	associated drawings must be shown the TAG-No.							
9	Every examination in our offices requires					weeks		
10	The whole documentation is to made in			German	X	English		0A
11	**Manufacturer documentation**		together with equip.			Index	X	Operating manual
12	X	Hazard analysis	X	Material certificates	X	Press. Ves-sel approval	X	CE-Conformity
13								
14		Drawing list	X	Drawings		Draw. as .dwg-File		
15								
16	The documentation shall be delivered as CD-ROM.							
17								
18	**Transportation rules**							
19	Transportation rules		acc. Incoterms 2010			(included in scope of supply)		
20	Transport protection		Opening closed and weld on parts secured against transportation damage					
21	Packing		Every single packed part is to be assigned with Equip.-No.					
22	Designation		Equip-No. with 10 cm large letters					

52	**Remarks**	Rev.
53		
54		
55		
56		

modis

Tag-No.	RGE440-AH920	Data Sheet Air Cooler		Customer	IDOSB
				Project	MIDI
		Description	Cooling Water Cooler	Project-No.	1800621000043
				Location	Tuzla, Turkey
Revision	0	Doc.-No.	**AS.5001.432.440.0000**	P&ID-Number	5001.956.440.0000

Sketch

Rev. 0B

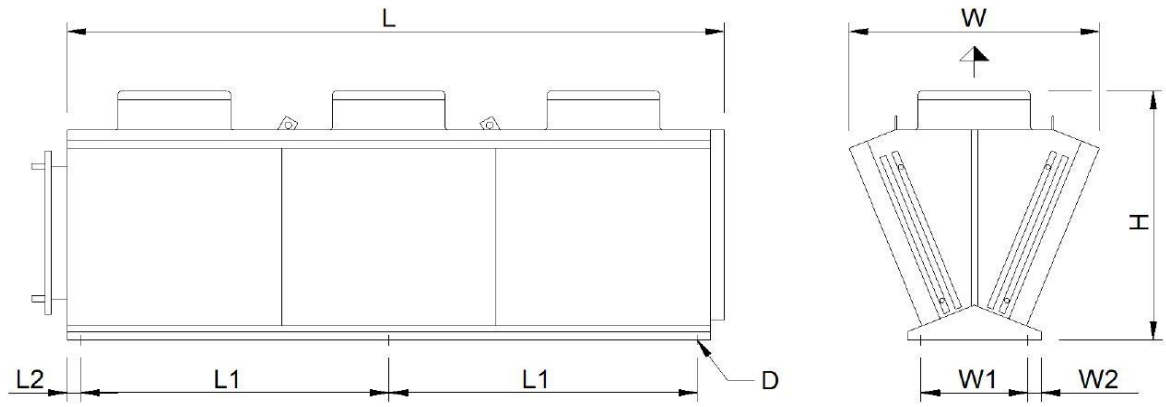

File: EMF\V-ShapeCompact-CoP_3_06_UNI.emf

L	=	3696 mm	W	=	1440 mm	H	=	1461 mm
L1	=	1715 mm	L2	=	86 mm	W1	=	656 mm
W2	=	27 mm	D	=	13 mm			

Remarks Rev.

This document is the property of Modis GmbH. Information hereon is confidential and may not be reproduced, divulged or sent to a third party without proper authorization.

Further information could be added on separate sheets with related row number.

Copy for Customer	Revision and Transfer
Reset or create similar dataset	