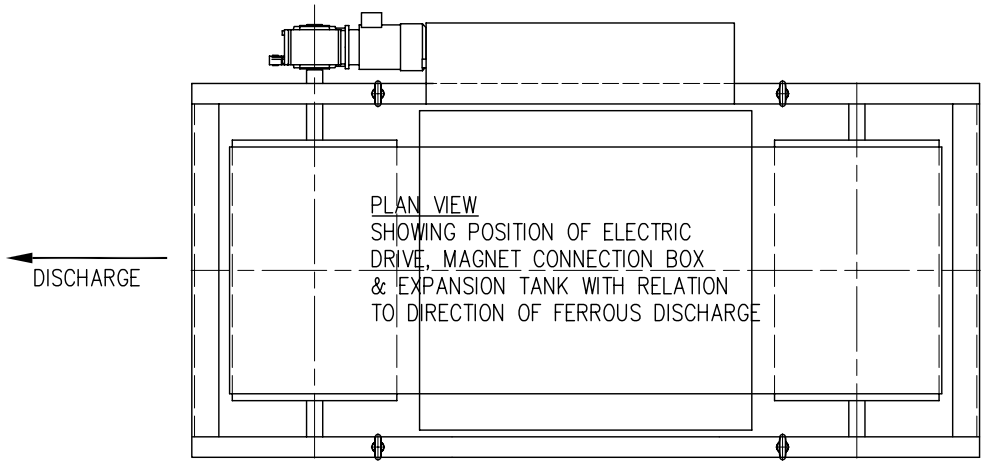

PLAN VIEW
SHOWING POSITION OF ELECTRIC DRIVE, MAGNET CONNECTION BOX & EXPANSION TANK WITH RELATION TO DIRECTION OF FERROUS DISCHARGE

VIEW ON 'C'

NOTES:

1– THE MAGNET IS FILLED WITH 464 LITRES OF OIL TO EN 60296
2– OIL LEVEL TO BE CHECKED PERIODICALLY WITH MAGNET COLD
3– THE SEPARATOR MUST BE INSTALLED WITH THE EXPANSION TANK IN HIGHEST POSITION
4– WEIGHT: 3000 KGS APPROX
5– WATTS: 5040
6– VOLTAGE TO BE SET PER CONTRACT
7– OVERALL GUARDING BY CUSTOMER TO SUIT SITE CONDITIONS

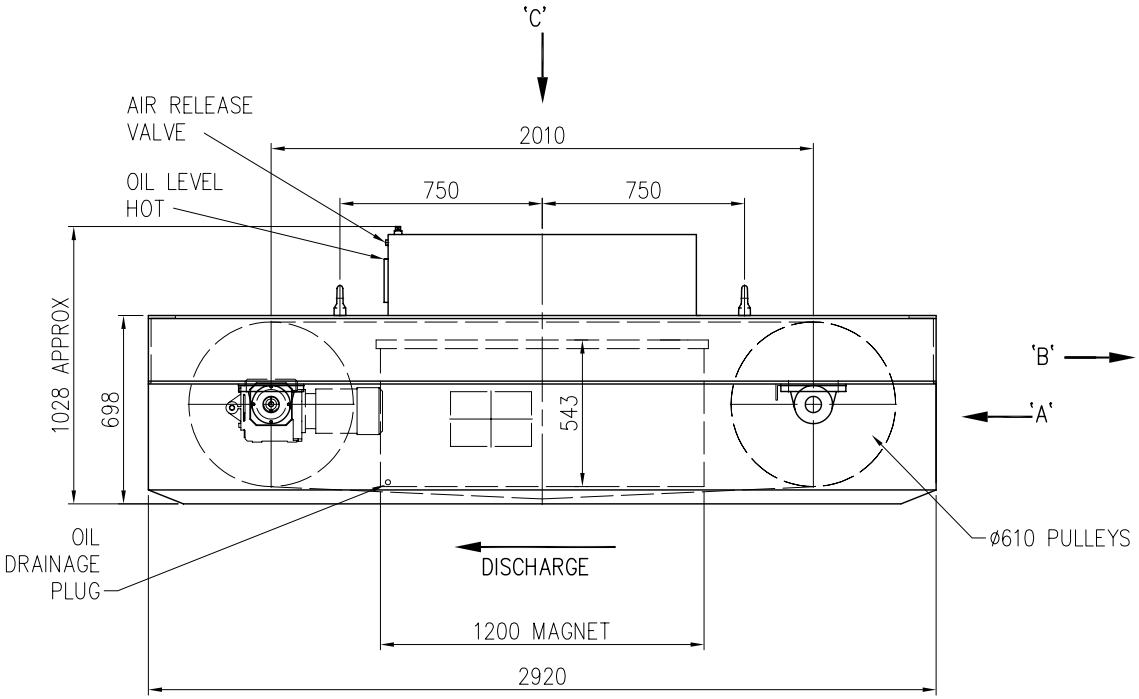

VIEW ON 'B'

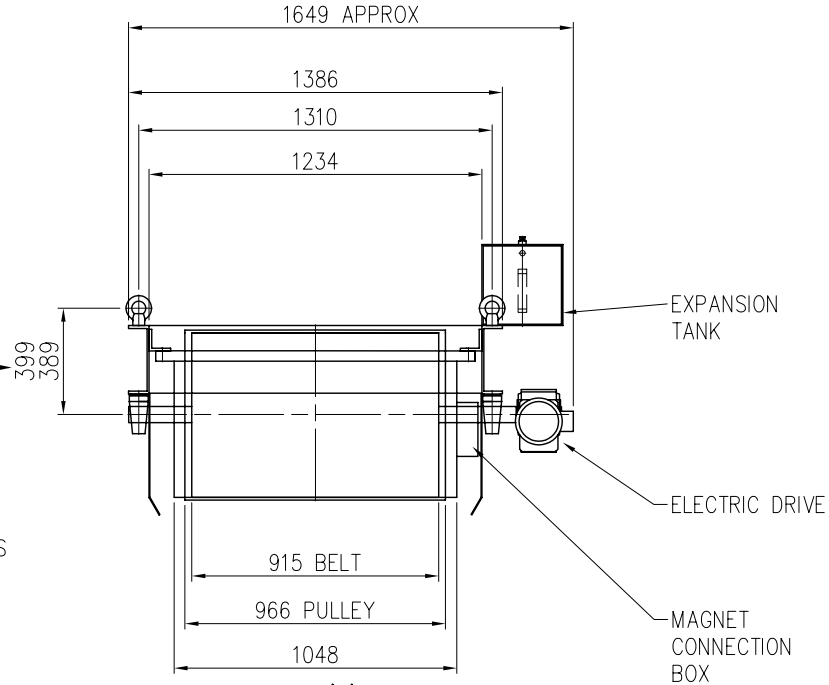

VIEW ON 'A'

REV.No.	ZONE	REVISION	DRAWN	DATE
3		NOTE 2 CHANGED FROM HOT TO COLD	PST	28.02.11
2		OIL SPEC CHANGE	WJ	19.11.09
1		EXPANSION TANK WAS 180 SQUARE	JR.	16.05.06

ERIEZ MAGNETICS EUROPE LTD
BEDWAS HOUSE INDUSTRIAL ESTATE
BEDWAS, CAERPHILLY, CF83 8YG
TELEPHONE (+44) (0)29 208 68501
FAX (+44) (0)29 208 51314
E-Mail. eriez@eriezeurope.co.uk

PROJECTION
SCALE 1:20

DRAWN	MDT
CHECKED	SD
DATE	02-04-04
EST. WEIGHT:	KGS.

STANDARD MANUFACTURING TOLERANCE
ALL DIMENSIONS IN MILLIMETERS

SUPERSEDES CBM 21860

SUSPENDED ELECTRO MAGNET
OIL– COOLED SE745 SC2
OPTION A

CA3-04- 02617

REVISIONS 3