NOM SIZE/ | DEVIATION/ | 1.WORK NUMBER/

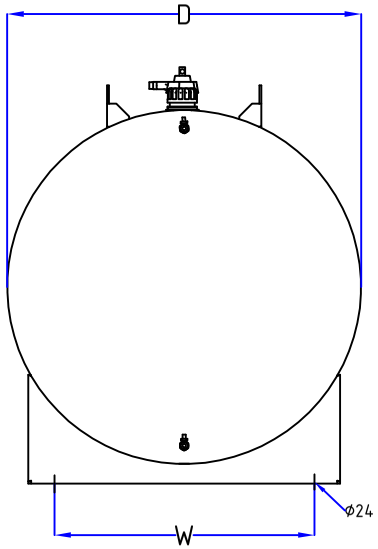

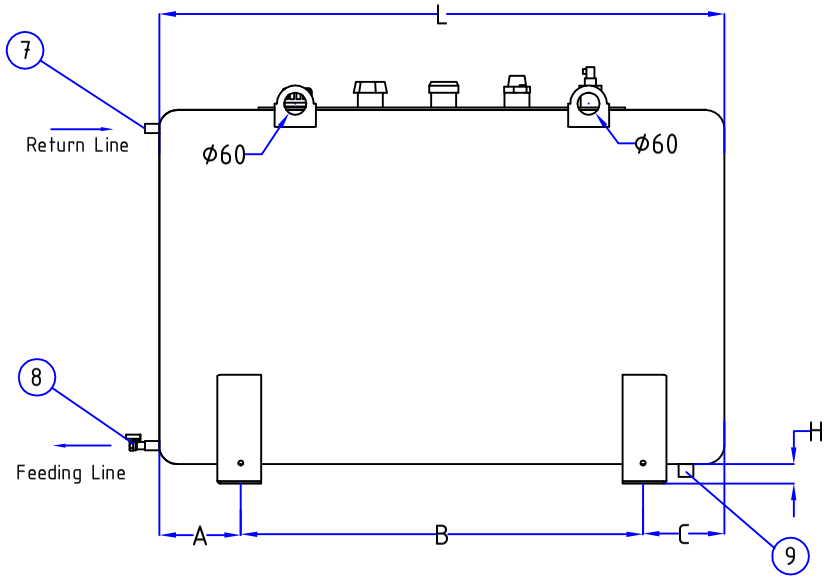

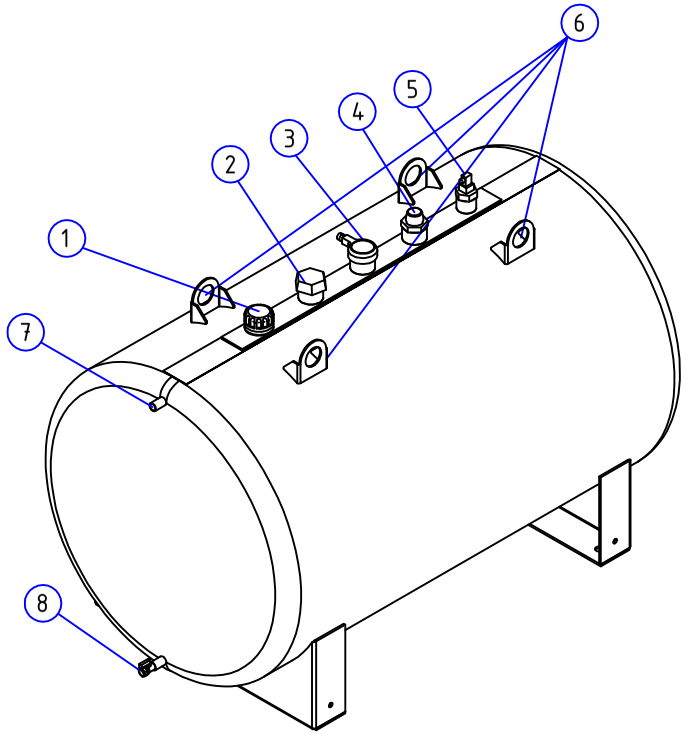

ACCESSORIES	
1	Locked Fuel Tank Plug
2	2"G Plug
3	Tank Emergency Vent
4	Flame Arrester
5	Level Gauge Switch
6	Lifting Lug
7	1/2" (Return Line)
8	1/2" Valve (Feeding Line)
9	1/2" Drain Plug

DIMENSIONS							
Litre / USgal	A	B	C	D	H	L	W
565 / 150	201	838	201	765	63,5	1240	562
705 / 186	198,5	1143	198,5	765	63,5	1540	562
878 / 878	233	774	233	965	53,5	1240	740
1085 / 286	227,5	1085	227,5	965	53,5	1540	740
1283 / 340	230	1390	230	965	53,5	1850	740
2083 / 550	230	1390	230	1215	68,5	1850	918

ALTERATION: INDEX/NO			
EXPLO/			
MANUF/			
FOUND/			
WELD/			
QUALITY/			
CALCUL/			
HYDRAUL/			
APPR/			
PREP/	08.12.2014	I.COSGUN	
	DATE/	NAME/	

REFERENCE DRAWINGS/

MATERIAL/ | WEIGHT/ | NX A2 | SCALE/

RAW PART/ | TYPE/

DENOMINATION/ UL/FM SINGLE WALL TANK | PART-NO/

NO/ | SHEET-NO/ 1

KSB

COPYRIGHT/ | ISO 16016 | OF/ 1

REPL FOR/ | ORIG FROM/