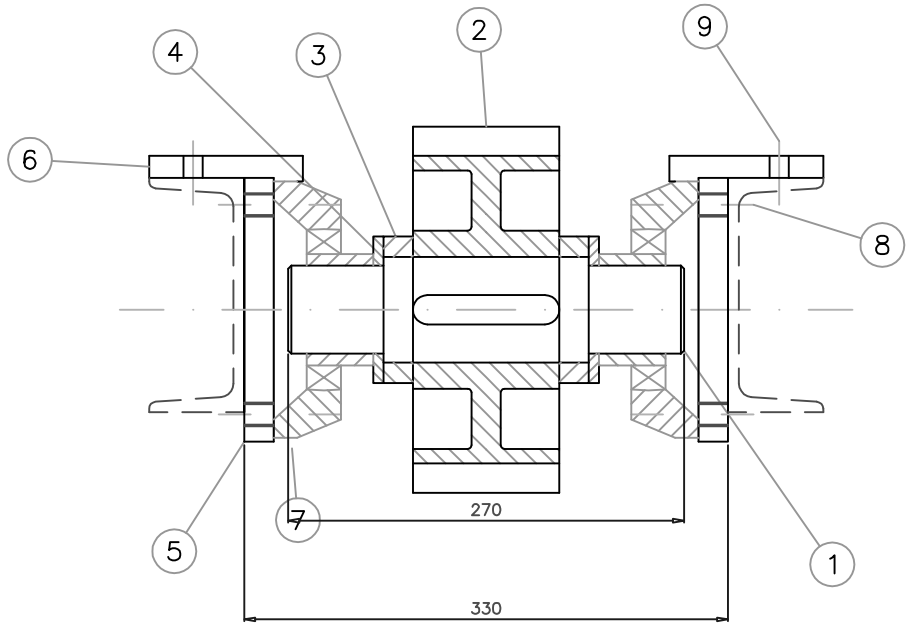

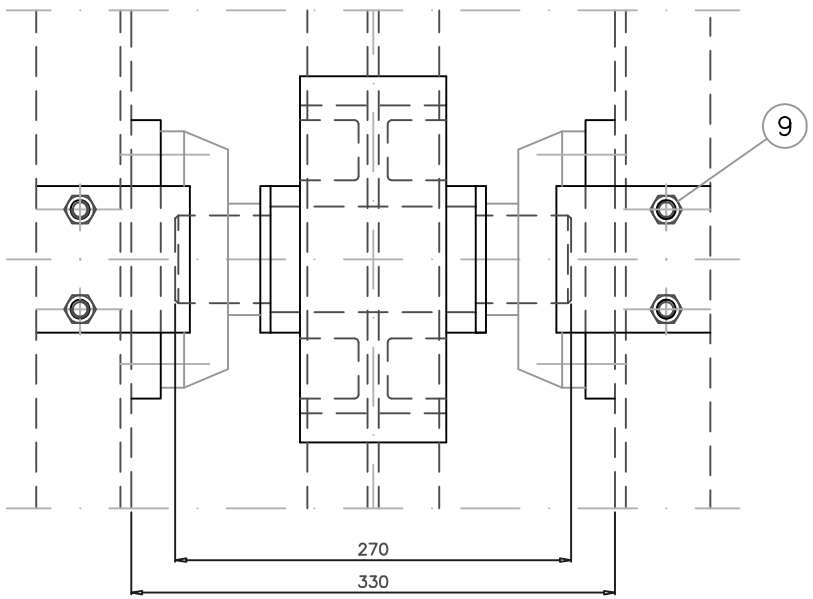

ITEM SIRA	QTY. ADET	DESCRIPTION PARÇA ADI	DRAWING NO RESIM NO	MATERIAL MALZEME	WEIGHT AGIRLIK	EXPLANATIONS ACIKLAMALAR
9	4	M12x45 ALT.CIVATA+YAYLI RON.				HAZIR
8	8	M16x45 ALT.CIVATA+YAYLI RON.				HAZIR
7	2	YATAK INA PCJY 60				HAZIR
6	2	PLAKA 105x100x17.5	0301.02.10	ST37		
5	2	PLAKA 190x180x20	0301.02.09	ST37		
4	2	PULø100xø60−7	0301.02.07	ST37		
3	2	PULø100xø72−20	0301.02.06	ST37		
2	1	TEKERø250xø72−100	0301.02.05	−		
1	1	MIL ø72−270	0301.03.01	ST60		

ITEM/SIRA	DATE/TARIH	NAME/ISIM	IMZA	MODIFICATIONS / DEGISIKLIKLER

	NAME/ISIM	DATE/TARIH	IMZA
DRAWN CIZEN	RECEP ÇÖMELEK	27/11/2001	
CHECKED KONTROL	ARSLAN ILERI	27/11/2001	
APPROVED ONAY	ULVI AYTANC	27/11/2001	

SCALE OLCEK	FORMAT	PLAN
1/2.5	A2	

Bu resim ile ilgili her turlu kullanim hakki AYTANC KONVEYOR A.S. Gaziosmanpasa/IST. aittir. Yazili izin alinmadan kismen veya tamamen kopya edilmesi veya 3.sahislara verilmesi yasaktir

This drawing and any article produced according to the details hereon is the property of AYTANC KONVEYOR A.S. Gaziosmanpasa/IST. It is supplied on the express terms that it is to be treated as Private and Confidential and is not to be copied or communicated to a Third Party without this Company's written consent.

AYTANÇ KONVEYÖR
SANAYI VE TICARET ANONIM SIRKETI
Tel:(0212)597 80 35(5 lines) Fax:(0212)597 81 79

TEKERLEK GRUBU

OYAK RENAULT

DRAWING NO: RESIM NO: 0301.03.00

REVISION NO: REVIZYON NO: